APPLIED COMPUTATIONAL ELECTROMAGNETICS SOCIETY (ACES)

NEWSLETTER

Vol. 6 No. 1 March 1991

TABLE OF CONTENTS

EDITOR'S COMMENTS 2

PRESIDENT'S REPORT 3

ANNUAL REPORT 4

COMMITTEE REPORTS 6

Publications Committee 6

Meetings Committee 7

PERSPECTIVES: 8

CODE DOCUMENTATION - Ronald Marhefka 8

WHAT NEXT FOR THE LARGE CODES? - Edgar Coffey 10

SUMMARY OF THE JOINT TEAM/ACES WORKSHOP - N.J. Diserens 12

NEW BENCHMARK EXPERIMENTS - S. Burke 17

CORRECTION FACTORS FOR SRI OPEN-WIRE LINE (OWL) GROUND CONSTANTS KIT DATA - G. Hagn 35

PLOT OF NEC-MOM RELATIVE RUN TIMES - P. Elliot 38

ACES BYLAWS (UPDATED) 39

ANNOUNCEMENTS 57

Joint ACES/TEAM International Workshop 57

Call for Papers for Special Issue of ACES Journal 58

1991 ACES Conference Highlights 59

1991 ACES Conference Agenda 60

1991 ACES Conference Short Courses 66

1991 ACES Conference Motel Listing 68

1991 ACES Short Course-Banquet-Registration Form 69

1991 ACES Membership Form 72

ADVERTISING RATES 73

EDITOR'S COMMENTS

This issue includes "Perspectives" articles from code developers Ron Marhefka and Edgar "Buddy" Coffey. Ron was one of the major contributors to the development of the GTD-based codes available from Ohio State University. Buddy Coffey developed the GEMACS code. We have asked them to share their perspectives on ACES and on computational electromagnetics. Two perspectives articles are featured in each issue of the ACES Newsletter to promote dialog.

NEW ASSOCIATE EDITOR FOR NEWSLETTER

The ACES Publications Staff is very pleased to welcome Dr. Reinaldo Perez as Associate Editor for the ACES Newsletter. Dr. Perez's background and interest in Electromagnetic Compatibility (EMC) will especially facilitate the contribution that ACES can make to the EMC community. Dr. Perez's address is shown below, and readers are encouraged to contact him to discuss the application of computational electromagnetics to EMC or any other ACES matters.

ACES NEWSLETTER STAFF

Paul Elliot, Editor
ARCO Power Technologies, Inc.
1250 24th St. NW, Suite 850
Washington, DC 20037 U.S.A.
Phone: Work: (202) 223-8808
Phone: Home:(202) 265-3350

Reinaldo Perez
Jet Propulsion Laboratory, Mail Sta. 301-460
California Institute of Technology
4800 Oak Grove Drive
Pasadena, CA 91109 U.S.A.
Phone: (818) 354-4321

ACES NEWSLETTER COPY INFORMATION

Issue	Copy Deadline
March	January 25
July	May 25
November	September 25

Send copy to Paul Elliot at the above address in the following formats:

1. A hardcopy.
2. Camera ready hardcopy of any figures.
3. If possible also send text on a floppy disk. We can read MICROSOFT-WORD and ASCII files on both IBM and Apple disks. On IBM disks we can also read Wordperfect and Wordstar files. If not possible to send a disk then the hardcopy should be in Courier font only for scanning purposes.

NEWSLETTER ARTICLES AND VOLUNTEERS WELCOME

The ACES Newsletter is always looking for articles, letters, and short communications of interest to ACES members. All individuals are encouraged to write, suggest, or solicit articles either on a one-time or continuing basis. Please contact a Newsletter Editor.

AUTHORSHIP AND BERNE COPYRIGHT CONVENTION

The opinions, statements and facts contained in this Newsletter are solely the opinions of the authors and/or sources identified with each article. Articles with no author can be attributed to the editor, or to the committee head in the case of committee reports. The United States recently became part of the Berne Copyright Convention. Under the Berne Convention, the copyright for an article in this newsletter is legally held by the author(s) of the article since no explicit copyright notice appears in the newsletter.

PRESIDENT'S REPORT

I received the election ballot in the mail recently. It gave me a great deal of satisfaction and delight. I was proud to belong to a society that has candidates of such high calibre willing to serve! I wish to extend my thanks to the candidates for their generosity of spirit. This is our second election by mail and is evidence that Pete Cunningham's and Pete Li's committees with Dick Adler's base support are equal to the task. I know that they were assisted by many others. To all involved I wish to express my feelings of confidence and satisfaction that you so quickly teamed up on this task. For the candidates, I have a special request. Please note that we have only three Board of Directors' positions to fill each year. The reality of elections is that you can never anticipate the extent of your exposure to the electorate. Should you not be elected this year, don't feel rejected, but rather consider your commitment to let your name stand to apply for future years.

It is very important for all of us to help increase the registration at our 7th Annual Review of Progress in Applied Computational Electromagnetics. As you can appreciate, the conflict in the Gulf has brought about a reduction in travel budgets that is likely to affect technical conference attendance. However, Frank Walker and his team have prepared a technical program that is excellent in scope and technical content. In addition the timely Short Course offerings and Display Booths will make for a great learning opportunity for attendees. Plan to come and urge your friends to attend.

Elsewhere in the Newsletter you will find information on recent ACES activity. However, the society continues to need your help in keeping the activity of our committees at a high level and relevant. Do identify a committee that supplied you with some information in the past or one that you are interested in. Call or write the chairman or myself offering your involvement. The committees need our help to recapture their early vitality while adapting to new sources of information and new needs. You will soon reap the reward of knowing that your efforts will be helping other members of our community.

Our March symposium will also be the occasion for our first yearly meeting as an incorporated society. The directors are helping me compile our annual report, summarizing our affairs to the end of the fiscal year. The report will be available at the symposium. Annual meetings of business corporations require a brief review of the annual report, approval of the selection of our auditors and any other urgent business. Since we have had our election by mail, the election of directors is not part of the meeting business. Should you wish to bring any important business to the floor of the meeting at that time, please write or phone Dick Adler or myself. The meeting will be scheduled for early Tuesday morning. We do need good attendance - so please plan to come.

Stanley J. Kubina
ACES President

THE APPLIED COMPUTATIONAL ELECTROMAGNETICS SOCIETY, INC.

NOTICE OF THE ANNUAL BUSINESS MEETING

Notice is hereby given that the annual business meeting of the Applied Computational Electromagnetics Society, Inc. will be held at King Hall, Naval Postgraduate School, Monterey, CA on Wednesday 19 March 1991 at 7:30 AM PST for purposes of:

1. Receiving the Financial Statement and auditors report for the year ending 31 December 1990.
2. Announcement of the Ballot Election of the Board of Directors.
3. Summary of the activities of incorporation and report of the non-profit status of the corporation.
4. Other business to be announced at the time of this meeting.

By Order of the Board of Directors
Richard W. Adler, Secretary

ANNUAL REPORT 1990

As required in the Bylaws of the Applied Computational Electromagnetics Society, Inc. a California Nonprofit Public Benefit Corporation, this report is provided to the members. (Additional information and an auditors report will be presented at the Annual Meeting and that same information will be included in the July Newsletter for the benefit of members who could not attend the Annual Meeting.

MEMBERSHIP REPORT

As of 31 December 1990, the paid-up membership totaled 470, with approximately 33% of those from non-U.S. countries. There were 2 student, 21 industrial (organizational) and 458 individual members.

It is impossible to accurately assess the change in membership since 1 January 1990, because the Society was incorporated on 26 March 1990 and became subject to new By-laws which require accounting for membership in a specific manner. (See Article 3 Section 9). Under the old ACES, we carried memberships for up to three months after expiration in order to meet our publications commitments to members. (Our publications schedule was slipping then, but is now stable). We reported 540 "members" in March 1990, before incorporation. Approximately 70 of those were carry-overs for late publications. Our paid-up membership has remained stable at the present level since March 1990.

Richard W. Adler, Secretary

ANNOUNCEMENT ON DUES INCREASE

In accordance with a 5-year financial plan adopted by the Board of Directors in May 1990, for the purpose of maintaining ACES as a financially solvent non-profit corporation, the annual membership dues will increase by $10, effective 1 April 1991, and will increase by an additional $10 each year.

The new rates will be:

Individual membership:	$45	US
	$55	NON-US
Industrial membership	$95	US
	$105	NON-US
Student membership:	$25	

FINANCIAL REPORT

ASSETS

BANK ACCOUNTS	1 JAN 90	31 DEC 90
MAIN CHECKING	6,409.56	7,151.25
EDITOR CHECKING	2,701.35	2,109.09
SECRETARY CHECKING	1,073.28	3,521.64
SAVINGS	2,397.03	2,180.68
CD #1	10,782.33	11,681.60
CD #2	10,782.33	11,681.60
TOTAL ASSETS	$ 34,145.88	$ 37,325.86

LIABILITIES

1990 CAEME Membership	<$3,000.00>
NET WORTH 31 December 1990	$ 34,325.86

INCOME

Conference	31,577.07
Publications	3,697.46
Membership	17,955.00
Software	9,169.00
Interest & misc.	9,484.77
TOTAL	$ 71,883.30

EXPENSES

Conference	19,991.01
Publications & Flyers	29,068.82
Software	5,678.12
Services (Legal, (taxes, secretarial)	7,844.61
Supplies & misc.	6,120.76
TOTAL	$ 68,607.32

NET INCREASE: for 1990	$ 179.98

James K. Breakall, Treasurer

COMMITTEE REPORTS

PUBLICATIONS COMMITTEE

Between symposia, almost all ACES activities have been provided by your publications team and by the now-independent "publications spinoffs" — the benchmark problem solution-ACES workshop program (presently administered by the software performance standards committee, as a joint activity with TEAM) and the code user group committee. As a result of our combined efforts, ACES has already surpassed many expectations of the founders and early members.

Yet, there remain unaddressed needs, and some potential will remain unfulfilled until ACES "flies on all engines". The active areas can never compensate completely for inactivity in other key areas.

Furthermore, indirect support from other committees is important to the success of the publications. For example, the upcoming Joint ACES/TEAM Workshop, scheduled for July 1991 in Sorrento, ITALY, can be an excellent source of material for the ACES publications and code validation activities — in addition to serving as a regional activity for the ACES members in Europe. However, the success of the workshop is contingent upon member participation. The active support of two other ACES committees (in addition to the software performance standards committee) can help guarantee this necessary participation.

Our attempts to compensate for inactivity elsewhere, together with the demands of several publications-related projects and activities, have left us with no time to prepare a publications report for this issue of the ACES Newsletter. Until next time . . .

David E. Stein
Editor-in-Chief

MEETINGS COMMITTEE REPORT

As this goes to press the annual ACES Review of Progress is fast approaching. According to Program Committee Chairman Frank Walker the response to the Call for Papers was excellent, and a good selection of presentations is expected. Short courses are being offered in conjunction with the Monterey Meeting, with 6 different courses on a variety of topics of interest to ACES members being planned.

While our tradition of holding the Annual Review of Progress in Monterey continues, ACES has received a preliminary proposal from Tony Fleming of Telecom Australia to hold an ACES meeting in Melbourne. Dr. Fleming has been invited to make a presentation on this to the ACES Board of Directors at the Monterey meeting, but travel difficulties may prevent it. Regardless, some ACES activity in Australia is anticipated, with the possibility of short courses or workshops also being considered.

While the Australia meeting is still in the proposal stage, other ACES international efforts are well under way. The Meetings Committee, together with the Software Performance Standards Committee, is promoting a series of international workshops on the use of canonical problems to validate electromagnetic codes and models. These workshops are joint projects with TEAM (Testing Electromagnetics Analysis Methods) Workshops. The first workshop was held in Toronto, on October 25 and 26, 1990 following the Fourth Biennial IEEE Conference on Electromagnetic Field Computation (CEFC). The second was held in Sendai, Japan, following the International Seminar on Computational Applied Electromagnetics, 31 January to 1 February, 1991. The third is scheduled for Sorrento, Italy, following COMPUMAG, 7-11 July 1991. A summary of the Toronto Workshop is published elsewhere in this issue of the Newsletter.

The joint workshops provide an opportunity for participants to present brief, informal descriptions of their methods, with emphasis on new work and on extending the capabilities of existing computer codes and models. These presentations will allow participants to contribute to the development of universal code performance standards, modeling guidelines, computational electromagnetics data bases, and tools for validation of codes and models.

The current set of canonical problems is listed in the ACES Collection of Canonical Problems: Set 1, and in the TEAM Workshop Set, Round 3. The workshops will be advertised by ACES; persons who are interested in participating in them should contact Harold A. Sabbagh, Vice-President of ACES. We especially encourage European members of ACES to participate in the Sorrento Workshop.

Harold A. Sabbagh
Sabbagh Associates, Inc.
4639 Morningside Drive
Bloomington, IN 47401

Raymond J. Luebbers
Electrical Engineering Dept.
Pennsylvania State University
University Park, PA 16802

PERSPECTIVES ON ACES AND COMPUTATIONAL ELECTROMAGNETICS

(This issue contains Perspectives from Ronald Marhefka and Edgar "Buddy" Coffey)

CODE DOCUMENTATION

Ronald Marhefka

Documentation is a dreaded word for code users and developers alike. The ease at which an engineer adapts to a given computer code, which he did not write himself, is dictated by how well the code is documented. For that matter, how well a code writer remembers what he did years later depends on the documentation. These are fairly obvious statements. Yet, my experience gained by talking with many different users of my codes throughout the years has not indicated a consensus as to what constitutes an ideal set of documentation. Some compliment my endeavors, while others are mystified.

Recent articles on PC software documentation and training have been published suggesting that the best types are short and simple. The computer code itself will be designed so as to be obvious to use. It suggests that this is possible because of modern computers. This thinking, it would seem, must center on word processors not on engineering applications. The codes often encountered in the ACES community span many ranges of applications which involve complex theories and approximations. In fact, I question whether it's even true in the PC world. For example, Microsoft Windows 3.0 is certainly easier to use than DOS for most users. The documentation, however, is certainly not short and simple.

Many topics have been discussed throughout the years in ACES, but I am not aware that this subject has been broached. To some extent, there is not much a user can do. He often has to take the cards that are dealt to him and make the best of it. Perhaps, however, a little dialogue on the subject would be productive.

As with beauty, good documentation may only be in the eyes of the beholder. Generally, it is thought that good documentation is composed of a theory manual describing the basic physics, a user manual detailing the input/output format, an applications manual (which may be included in the user manual as assumed here) giving detailed examples with validation, and a code manual presenting the inner workings of the code. It is my experience that sponsors provide little resources (money and/or time) for anything but the user manual. This is the most important one after all. The theory is often already described in papers or technical reports. The code should be properly commented and structured so as to be reasonably followed anyway. The user manual is the key that most often needs to be relied upon.

What makes a good manual? So called general purpose codes have a difficult time catering to one party. Most often they have been sponsored by more than one organization and have evolved to try to be as much to as many people as possible. This usually leads to a proliferation of commands or options. The more options the more information that must be conveyed.

My feelings are that a good user manual will contain many of the following features. A reasonable overview of the code's capabilities should be provided. Limitations are tougher, since it's often hard to know what can't be done at least in terms of good engineering approximations. An overview of the commands available, by function, is also helpful early on so that the user gets an overall picture. Next a detailed alphabetically listed description of the command format is needed, perhaps with a few examples. Detailed examples illustrating validated applications is

essential. User's often indicate that they start from an existing example closest to their own problem and then expand upon it. Information to interpret the output is also needed, since most often users have their own format for displaying results. In addition, cross references and more cross references with a good index is necessary. Many of the questions asked are usually answered in the manual. It just can be very difficult to find.

Information concerning dimensioning of variables and other simple user changeable parameters is also useful in the user manual. Computer specific operation is usually limited and difficult to provide since there are so many different computers in use. The detailed internal information usually goes in a code manual, if it exists. In fact, a colleague advocates that the classical code manual should actually be two manuals. The first, let's call it an algorithm manual, would concentrate on a language independent overview of the code. The second, a code manual, would contain the language specific variable definitions, etc.

The future appears to be interactive programs. There are many attempts to implement front end packages for various codes, however, they are not as widely distributed. This could be due to the hardware specific nature of the software especially the graphics. In any case, given time and standardization efforts this status should improve. In line help, I believe will become more common at least for basic input formatting issues.

I don't believe that electromagnetic codes can ever be developed without having educated users. This leads me to believe that ACES may be one of the best supplemental forms of documentation. The promise of ACES since the start has been a forum for code users and developers. Through the conferences, workshops, journals, newsletters, and hopefully user groups a dialogue on any and all codes concerning electromagnetic computation can be furthered.

BIO

Dr. Ronald J. Marhefka has been with The Ohio State University ElectroScience Laboratory since 1969. He has worked in the area of high frequency techniques such as the Uniform Geometrical Theory of Diffraction. He is the developer of the NEC - Basic Scattering Code and the RCS - Basic Scattering Code and has worked on the Aircraft Code in the past. He is an associate editor of IEEE Transaction on Antennas and Propagation. In addition, he is a founder of ACES and has served on the ACES Journal Editorial Board since its establishment.

PERSPECTIVES ON ACES AND COMPUTATIONAL ELECTROMAGNETICS

WHAT NEXT FOR THE LARGE CODES?

Edgar Coffey

The mainstay codes of electromagnetics (NEC, GEMACS, etc.) have been around for nearly two decades. True, they have been modified, upgraded, and to a large part rewritten. But the codes themselves are products of a mainframe, batch processing world that bears little resemblance to the EM workplace today with its desktop computers, local area networks, parallel processors, etc. How should the large codes be adapted to this new environment?

I confess that I do not have the definitive answer. In fact, I don't have any answers. But perhaps I can supply some food for thought. I'd like to address the areas of code capability, code structure, and user interface.

Code Capability

I suppose more is better, but it is my opinion that the physics we have already implemented into numerical tools have yet to be tapped to any great extent. We have method of moments (MOM) for wire segments, surface patches, and wire/patch hybrids; geometrical theory of diffraction (GTD) for flat and curved surfaces with rays that can be traced up to any desired interaction level; finite differences (FD) in both frequency and time domains; plus a number of techniques for specialized applications.

GEMACS (and perhaps other codes as well) has hybridized these capabilities to permit use of more than one physics method in a problem, such as MOM wire segments attached to a GTD surface that includes an aperture penetration into an FD cavity.

While we can do "fine tuning" to the physics, I believe that much more benefit can be gained from putting effort into better solution techniques, including approximate methods. There are not many EM problems that require better than a 1-2·dB accuracy, but our solution methods are for the most part "all or nothing" techniques. How beneficial it would be if it were possible to devise a solution approach that would let the user select the accuracy desired and not pay the computational penalty for additional accuracy! GEMACS' banded matrix iteration (BMI) method does this to some extent, but this is merely scratching the surface.

Code Structure

Our codes for the most part are still designed and built using a sequential, single task, batch mode metaphor. Yet we now have the capabilities of multitasking (via OS/2 or UNIX), parallel processing, and even physics built into hardware. The scope of EM problems we are now working require that we take advantage of these new operating system and hardware capabilities.

User Interface

Of the three areas in this article the most progress has been made in better interfacint the user to the codes. GEMACS for example has a rich set of English language commands and a CAD-like geometry language. NEC, GEMACS, and BSC all have some degree of three-dimensional graphics capability for visualizing or designing a geometrical structure for a particular physics method.

But just as important as the graphical interface is the way an EM problem is "managed". It's not enough to generate results. Somehow the observables of interest must be retrieved from the results. Perhaps one analyst wants to plot current vs. frequency. Another analyst might want current vs. excitation type. And the list goes on. The way we all (I suspect) work now is that we generate lots of paper (or computer files) with our favorite code and then manually extract the data we wish to plot up for analysis. If you're like me, you are spending more time on the tedium of finding data, formatting it, plotting it, etc. than in generating or analyzing it.

Some of us are involved in a project to build a parameter table archive and retrieval method that could be used with GEMACS and perhaps other codes in the future. Before GEMACS is run, a "dry run" (no physics) is made to generate a structure containing parameters (frequency, conductivity, look angle, etc.) and their values. For each combination of values we store the symbols (impedance, current, fields, etc.) that will be generated with those parameter values when GEMACS is run. The retrieval side of the problem then queries the databases for a set of GEMACS runs and picks out those data corresponding to the parameters the analyst desires. While this is not a thrilling physics breakthrough, it does promise to speed up the overall analysis time significantly.

Summary

For what it's worth, this is the direction in which I see the greatest productivity gains being made. And when you stop to think about the resources spent in solving an overall EM problem from conception to structure generation to physics to analysis to decision making, it behooves us to consider productivity contributions in areas other than applied EM physics.

BIO

Dr. Edgar L. Coffey is founder and owner of Advanced Electromagnetics, a small consulting firm in Albuquerque, NM. He specializes in numerical electromagnetic methods, especially in hybridizing diverse EM techniques into consistent solution methods. He and his staff have written the majority of the software in version 5 of the GEMACS computer code. He is presently involved in the design and implementation of a new user interface for GEMACS.

SUMMARY OF THE JOINT TEAM/ACES WORKSHOP

HELD AT
HYDRO PLACE, 700 UNIVERSITY AVENUE, TORONTO, ONTARIO
25-26 OCTOBER 1990

INTRODUCTION

This Workshop was a joint meeting between the Applied Computational Electromagnetics Society (ACES) and Testing Electromagnetics Analysis Methods (TEAM). These two groupings of people had each devised their own series of benchmarks for testing of computer programs in electromagnetics and it was appropriate that they should meet on a collaborative basis following the CEFC 90 Conference on field computation. The Workshop was organized and chaired by Harold Sabbagh and attended by 45 people.

The TEAM workshop series originated at a meeting following the 1985 COMPUMAG Conference in Fort Collins, Colorado. Originally known as the Eddy Current Workshops, because it arose from a need by developers of eddy current programs to verify their codes, it was later renamed TEAM. At the same time it was accepted that a wider range of problems should be covered, particularly in the area of non-linear and anisotropic materials, although these have been confined to low or zero frequency in the time domain.

ACES was organized in 1986, with similar aims, but from the start it has embraced the whole spectrum of high and low frequency applications. It is now formally chartered and incorporated as a non-profit organization and its activities are far more wide ranging than those of TEAM.

WELCOME

The participants were welcomed by Atef Morched of Ontario Hydro. He expressed a keen interest in the activities of the Workshops and said he and his section would be glad to give a presentation of their own work in electromagnetic analysis.

Georgio Molinari, Chairman of TEAM, outlined the present series of Workshops. These had been held at Oxford in April 1990, at Graz in early October, and following this meeting in Toronto there would be a Workshop in Sendai, Japan in January 1991.

David Stein spoke on behalf of ACES. He welcomed the joint venture of combining the ACES and TEAM Workshops on this occasion and said that ACES held a symposium annually in March.

IDENTIFICATION OF BENCHMARK PROBLEMS SOLVED

The problems active at the present time were then listed and with them the names of those who were submitting solutions.

These were:

TEAM Problem 8 (Crack in a plate)	Sabbagh Bossavit
TEAM Problem 9 (Moving coils in pipe)	Ida
TEAM Problem 10 (Non-linear eddy current)	---
TEAM Problem 12 (Cantilever beam in transient field)	---

TEAM Problem 13 (Non-linear magnetostatic	Fujiwara Trowbridge Biro Nicolas
TEAM Problem 14 (Tokamak with LCT coils)	Biro
ACES PROBLEM 1 (Air cored coil over a slot in a plate)	Sabbagh
ACES PROBLEM 2 (Antenna problem)	Leoni

REVIEW/OVERVIEW OF TEAM WORKSHOPS

Larry Turner gave a brief history of the TEAM Workshops and said that their success was an outstanding example of how such a collaboration could stimulate progress to the benefit of all.

Alain Nicolas spoke about the Workshops which had been held in France, at Grenoble, Lyon and Paris during the previous series.

Jim Diserens reported that the Workshop in Oxford in April 1990 had a good attendance and that the Workshop sessions had been interleaved with a seminar. The active benchmark problems for that meeting were: TEAM problems 8,10, and 13. Problem 12 had only one solution presented from Japan. The others each had several sets of results. A Planning Board was set up which would decide new problems to adopt and which would organize the notebooks.

Oksar Biro reported on the Workshop in Graz in early October 1990. Again the Workshop sessions had been interleaved with a seminar. TEAM Problems 8 and ACES Problem 1 (similar) had one result presented. There were no new results for Problems 9 and 10. There was one result for Problem 12, three for Problem 13 and one for Problem 14.

Raffaele Albanese announced that a TEAM Workshop would take place after the 1991 COMPUMAG Conference. The date of the Workshop would be either Friday/Saturday July 12/13 or Monday/Tuesday July 15/16. The meeting expressed a preference for the later dates.

Takao Takahashi said that the deadline for papers for the January meeting in Sendai, Japan had expired, but that submissions for the Workshop would be accepted until October 31.

SOLUTIONS

Harold Sabbagh, ACES Problem 1 and TEAM Problem 8.

The two solutions were presented together. The ACES Problem being an air-core coil over a slot in a plate and the TEAM Problem having a differential air-core coil with a similar geometry. He used an integral method with a regular grid. Work on the program had received considerable assistance from Jenkins and Bowler at Surrey University in the UK.

Alain Bossavit. TEAM Problem 8.

This method used edge elements in H. The block is treated as a source of current. There is a coarse mesh around the block and a fine mesh around the crack.

Koji Fujiwara summarized previous results for TEAM Problem 13.

This is a highly non-linear magnetostatic problem. The methods used either vector potential or scalar potential. The results at 3000 ampere-turns had been better than those at 1000 ampere-turns. The Newton Raphson method gives good convergence for vector potential methods but not for scalar potential. There had been some experimentation with acceleration factors.

Oskar Biro. TEAM Problem 13.

For the first solution the two (scalar) potential method was used with a simple update of permeability for the non-linear iterations. No periodic boundary conditions were available at that time. Later solutions were obtained using (a) vector potential and (b) edge elements. These both used one-quarter of the model with the periodic boundary conditions. Edge elements gave better results.

Bill Trowbridge. TEAM Problem 13.

This solution also used the two potential method. Results were similar to those of Biro. The higher current runs gave closer agreement with experiments. Fields in free space appeared to be fairly good. There was a marked discrepancy at the corner of the iron.

Alain Nicolas. TEAM Problem 13.

Three programs had been used to investigate Problem 13:
a) FLUZ3D magnetostatic, using scalar or vector potential.
b) PHI3D eddy currents and high frequency, linear only.
c) TRIFOU time varying, with non-linear materials.

Results in the air space were all good. PHI3D was best for a model with less than 1000 elements. For a non-linear program the worst results were with FLUX3D using the two potential method, the best were with TRIFOU. (The NAKATA edge elements had given the worst results in air but the best in iron). There was a need to focus attention on why the lower current results were less accurate.

Oskar Biro. TEAM Problem 14.

This problem is determining the power loss in the casing of the toroidal coil in a TOKAMAK due to transient currents in the LCT (poloidal) windings. Results with the A-PHI method using a backward Euler time-stepping, with 15,000 degrees of freedom, gave a mean power loss of about 66 percent of the measured value.

Nathan Ida. TEAM Problem 9.

This problem is an example of the non-destructive testing of a pipe using two internal coils, both concentric with the tube axis, spaced in the axial direction. One coil produces the drive field at 60 Hz and the other is the detector. Results were given with plots of the axial and radial field components just above and just below the surface of the tube.

Allesandro Leoni. ACES Antenna Problem.

Results were given using two wire grid models. These had 646 segments and 1608 segments. Good agreement was obtained with measurements.

PRESENTATION BY ATEF MORCHED OF ONTARIO HYDRO

Dr. Morched described the kinds of electromagnetic problem which his Section at Ontario Hydro were addressing. They were concerned with magnetic fields and transients in transformers and transmission lines. Their aim was to minimize cost while maximizing safety. Resonances were important; turn-to-turn capacities and overall reactance needed to be calculated. A lumped circuit approach was used but not finite elements. Manufacturers did not always give full details of their design. He later introduced Eva Tirasiewicz, who was developing computer software for this work.

PRESENTATION BY EVA TIRASIEWICZ OF ONTARIO HYDRO

Eva Tirasiewicz gave a short talk about her network program. A typical example of a problem was given by a five-leg transformer modeled by representing three legs with a plane of symmetry. The program assumes that E and M are the same in each lamination. Impedances are represented by a truncated series, taking into account the internal impedance (analytic) and the surface impedance (calculated numerically). Non-linearity could be represented. Newton Raphson was used in the solution process. The work will be published shortly by EPRI in Palo Alto, CA.

DISCUSSION OF PROBLEMS

Koji Fujiwara reviewed all the results for Problem 13. The closest fit to the measured values in the iron was given by IGTEDDY. TOSCA gave a dip at the corner and the question was "why"? Most results were good in air, the least accurate being those from Mohammed and from FLUX3D.

Bill Trowbridge pointed out that edge elements gave good results and also that vector potential showed better accuracy for some types of problem. Perhaps it was not edge elements ,as such, but the use of B as unknown.

Harold Sabbagh said that the chief problem with using H was that H must vanish in infinitely permeable iron.

Oskar Biro pointed out that the two nodal A formulations gave a worse result than for the edge elements, but maybe there were less degrees of freedom.

Alain Bossavit explained the theoretical basis of why formulations using B and A should give better results with problems having a large ratio of permeabilities, and that analogously, problems having high conductivities would give better results using h and phi.

Harold Sabbagh asked if anyone had tried using Conjugate Gradient for solving non-linear problems, with the permeability curve invoked right from the start. Perhaps this should be tried.

There was a discussion on the cpu (u.c.) times recorded. It was not clear how comparison could be made between programs which were running on different systems, in particular between scalar and vector processors.

NEW PROBLEMS

Several new problems were proposed and referred to the planning board. These were as follows:

Proposed by Miklos Gyimesi:

(Problems b to d have analytic solutions but they are non-physical)

a) An inverse problem.
b) An infinite half cylinder of non-linear iron with a specified B-H curve, with a current filament at the cylindrical centre.
c) A domain (eg. a cube) with distributed currents.
d) An iron torus with a current filament of infinite length normal to and in the centre of the hole.

Proposed by Harold Sabbagh: (All based on experimental work of S.K. Burke).

a) A thick plate with a rectangular slot, and a 7 kHz coil. With axis normal to the plate.
b) A similar problem using instead a thin plate with a rectangular crack.
c) A similar problem but with two layers of plate, each with a crack, with the two cracks crossing each other.
d) A crack in an infinite plate, and a coil with a crack, the outer surface of the coil being tangential to the plate and with the crack in-line with the coil axis.

Proposed by David Stein:

A flat or singly-curved plate has a crack or gap, at a (variable) orientation relative to the propagation direction of an incident plane wave. (Calculate the scattering effects due to the gap, for various incidence angles and frequencies, and for both parallel and perpendicular incident polarization. Use k-space and imaging techniques as needed, but present final results as functions of frequency, angle, and polarization).

CLOSING SUMMARY BY BILL TROWBRIDGE

In conclusion to the workshop, Bill Trowbridge summarized the progress in understanding the problems.

There had been a good diversity of views. Problem 14 (eddy current problem) had produced only one solution at this meeting. Problem 13 was a good example of non-linear magnetostatics. The Japanese measurements and the Bossavit theory all jelled. Indications were that, although results with edge elements appeared to be the best, it was the solution variable which was important depending on the degree of saturation of the iron and the range of permeability.

There was some disagreement as to whether benchmark problems should necessarily be physical. Also there was the question of whether we are equipped to tackle radar problems.

Timing details given by those submitting results are very confusing. These need to be examined and clarified.

To get accurate measurements is often harder than computer modeling. Error estimates are needed.

In concluding he thanked Ontario Hydro for hosting the workshop; Harold Sabbagh for organizing the meeting; Georgio Molinari and the three Vice Chairmen for their continued activity; Mary Menzel for her talk on the Los Alamos computer codes and all those who had contributed to making the workshop successful.

N.J. Diserens
Math and Computation Branch
Chalk River Laboratories
AECL Research
Chalk River, Ontario, CANADA K0J 1J0

EDDY CURRENT NDE
ADDITIONAL BENCHMARK PROBLEMS

This document contains four additional benchmark problems for the computation of ΔZ in eddy-current NDE. (The first benchmark problem has already been widely distributed and is published in *J. Nondestr. Eval.* **7** 35–41 1988). The experiments and theoretical calculations given here were collected at the Aeronautical Research Laboratory over the past three to four years, as part of a continuing program into eddy-current modelling. Dr David McKirdy (Barrodale Computing Services, Victoria, B.C. Canada) initially showed an interest in these data and motivated me to collect the results together into a more useful form. Dr McKirdy has performed theoretical calculations for all of these problems but, apart from references to his published work, I have not included his results here.

While every attempt has been made to ensure that the data given here are (typographically) error free, some errors may remain. Please feel free to contact me if you require further details on this work.

Dr Steve Burke
DSTO Aeronautical Research Laboratory
PO Box 4331 Melbourne, VIC 3001
Australia

Telephone: +61 (3) 647-7520
Facsimile: +61 (3) 646-6769

[Editor's note: The following are four new nondestructive evaluation (NDE) benchmark experiments. They are the first of a series of canonical problems and/or solutions received since the first set was published. Problems will be published in the ACES Newsletter as they are received, and solutions will be published in the Newsletter or Journal as appropriate. Please send these to Harold (Hal) Sabbagh who is coordinating this collection as co- chairman of the Software Performance Standards Committee and also as ACES Vice-President. Hal's address is Sabbagh Assoc., PO Box 7706, Bloomington, IN 47401, USA. At suitable intervals as finances permit, we will also periodically publish them separately as subsequent volumes of canonical problems as was done for the first set of problems.]

BENCHMARK TESTS (2)

RECTANGULAR SLOT IN A THICK PLATE

S.K.Burke
DSTO Aeronautical Research Laboratory
PO Box 4331 Melbourne 3001
Australia

Summary

Additional experimental measurements of ΔZ are given here for the rectangular slot geometry (cf. [1] for the first Benchmark problem) but using a different coil at higher frequency (7 kHz). In this case, deviations from ideal coil behaviour are estimated to be less than 1 %. These data were originally circulated in Nov. 1988. Theoretical calculations have subsequently been published for this geometry [2] and are denoted Model 2.

References

[1] S.K.Burke *J.Nondestr.Eval.* **7** 35-41 (1988)
[2] D.McA.McKirdy *J.Nondestr.Eval.* **8** 45-51 (1989)

Table 2.1 Test parameters[a]

The coil	
Inner radius (a_2)	9.34 ± 0.05 mm
Outer radius (a_1)	18.40 ± 0.05 mm
Length (b)	9.00 ± 0.20 mm
Number of turns (N)	408
Lift-off (l)	2.03 ± 0.05mm
The test specimen	
Conductivity (σ)	3.06 ± 0.02 x 10^7 S/m
Thickness	12.22 ± 0.02 mm
The defect	
Length ($2c$)	12.60 ± 0.02 mm
Depth (h)	5.00 ± 0.05
Width (w)	0.28 ± 0.01 mm
Other parameters	
Frequency	7000 Hz
Skin-depth at 7000 Hz	1.09 mm
Isolated coil inductance	3.96 ± 0.1 mH
Isolated coil resonant frequency	750.0 kHz

[a]See also Fig. 2.1

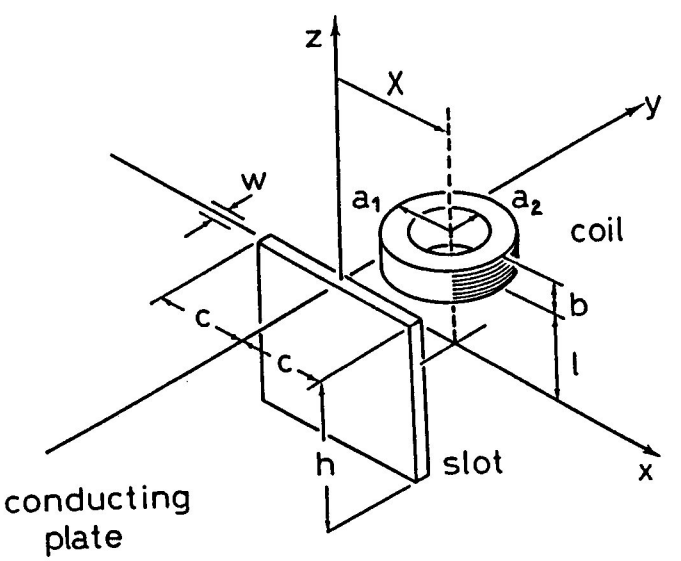

Figure 2.1 Schematic configuration for the measurement of ΔZ due to a surface breaking slot.

Table 2.2 Position Dependence

Change in coil impedance[a] as a function of coil centre position X at a frequency of 7 kHz
Data have been folded onto the interval $X \geq 0$.

X (mm)	ΔL (μH)	ΔR (Ω)	X (mm)	ΔL (μH)	ΔR (Ω)
0.0	0.5	0.02	15.0	9.1	0.18
1.0	0.2	0.02	16.0	8.4	0.18
2.0	0.5	0.02	17.0	7.3	0.16
3.0	0.7	0.04	18.0	6.4	0.14
4.0	1.4	0.05	19.0	5.0	0.12
5.0	2.0	0.06	20.0	4.1	0.10
6.0	3.0	0.08	21.0	3.0	0.08
7.0	3.9	0.11	22.0	2.3	0.07
8.0	5.2	0.13	23.0	1.6	0.05
9.0	6.6	0.15	24.0	1.1	0.04
10.0	7.5	0.17	25.0	0.7	0.03
11.0	8.6	0.18	26.0	0.5	0.02
12.0	9.3	0.19	27.0	0.5	0.02
13.0	9.5	0.19	29.0	0.2	0.01
14.0	9.5	0.19	31.0	0.0	0.00

[a]Typical experimental error in ΔL is $\pm 0.02\,\mu$H and error in ΔR is $\pm 0.1\,\Omega$

BENCHMARK TESTS (3)
CRACKS IN A THIN PLATE

S.K.Burke
DSTO Aeronautical Research Laboratory
PO Box 4331 Melbourne 3001
Australia

Summary

Experimental and theoretical results are given here for ΔZ due to a through-crack in a thin brass sheet. There are two data sets. Table 3.2 lists ΔZ as a function of coil centre position X with $Y = 0$ ('longitudinal scan') at a constant frequency of 1 kHz. Table 3.3 lists the frequency dependence of ΔZ from 110 Hz to 10kHz with the coil centred on the crack $X = Y = 0$. These data were used in the paper 'Interaction of induced currents with cracks in thin plates' by S.K.Burke and L.R.F.Rose [1] and further details can be found therein. Note that the theory is a low frequency approximation so the agreement between theory and experiment becomes poorer as the frequency is increased above ≈ 3 kHz. More recent theoretical results are given by McKirdy [2] using the volume integral method.

References

[1] S.K.Burke and L.R.F.Rose *Proc.Roy.Soc.* **418A** 229–246 (1988)
[2] D.McA.McKirdy *J.Nondestr.Eval.* **8** 45-51 (1989)

Table 3.1 Test parameters[a]

The coil	
Inner radius (a_2)	9.33 $\pm$ 0.05 mm
Outer radius (a_1)	18.04 $\pm$ 0.05 mm
Length (b)	10.05 $\pm$ 0.05 mm
Number of turns (N)	1910
Lift-off (l)	1.87 mm
The test specimen	
Conductivity (σ)	1.65 $\pm$ 0.02 x 10^7 S/m
Thickness	0.89 $\pm$ 0.01 mm
The defect	
Length ($2c$)	44.4 $\pm$ 0.02 mm
Depth (h)	through-thickness slot
Width (w)	0.30 $\pm$ 0.01 mm
Other parameters	
Frequency	1000 Hz
Skin-depth at 1000 Hz	3.91 mm
Isolated coil inductance	84.2 $\pm$ 0.1 mH
Isolated coil DC resistance	260 Ω
Isolated coil resonant frequency	123.0 kHz
Theoretical calculation	
Using formalism of Burke and Rose, Proc.Roy.Soc. (1988)	
Number of terms in Chebyshev series 20	

[a]See also Fig. 3.1

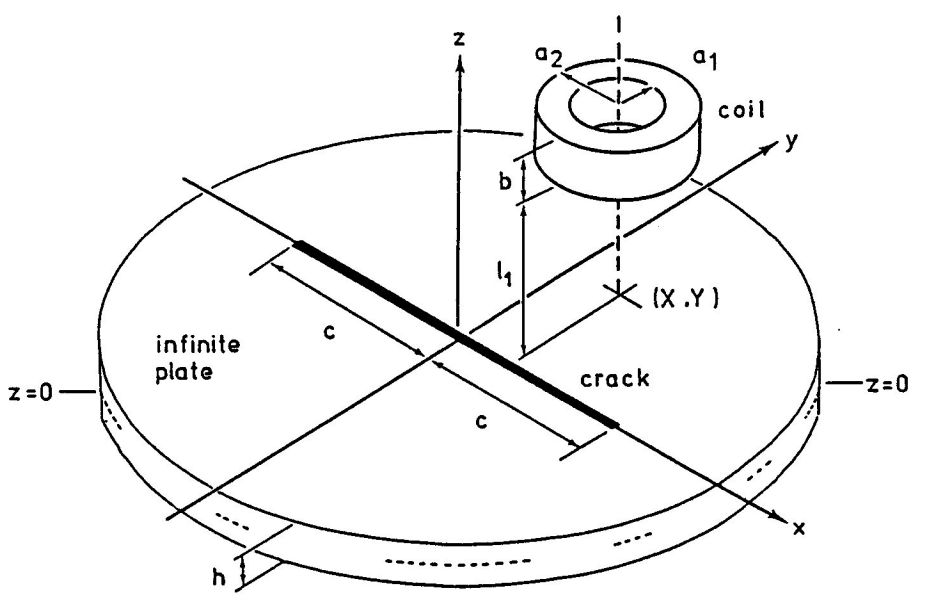

Figure 3.1 Eddy-current induction by a circular coil in an infinite plate containing a straight, through-thickness crack, showing the configuration used for the experimental measurements of ΔZ and the notation used for the coil parameters.

Table 3.2 Position Dependence

Change in coil impedance as a function of coil centre position X at a frequency of 1 kHz. Data have been folded onto the interval $X \geq 0$.

	Experiment[a]		Theory[b]	
X_C (mm)	ΔL (mH)	ΔR (Ω)	ΔL (mH)	ΔR (Ω)
0.0	1.91	−14.2	1.8954	−13.442
2.0	1.91	−14.3	1.9014	−13.524
4.0	1.93	−14.5	1.9204	−13.736
6.0	1.97	−14.9	1.9602	−14.172
8.0	2.05	−15.6	2.0280	−14.870
10.0	2.13	−16.5	2.1281	−15.811
12.0	2.25	−17.5	2.2561	−16.886
14.0	2.39	−18.5	2.3997	−17.906
16.0	2.54	−19.5	2.5388	−18.673
18.0	2.65	−19.7	2.6522	−19.016
20.0	2.72	−19.5	2.7205	−18.834
22.0	2.74	−18.9	2.7286	−18.081
24.0	2.66	−17.2	2.6682	−16.764
26.0	2.53	−15.3	2.5349	−14.938
28.0	2.34	−13.1	2.3321	−12.699
30.0	2.07	−10.6	2.0706	−10.199
32.0	1.79	−8.1	1.7683	−7.642
34.0	1.49	−5.8	1.4507	−5.264
36.0	1.20	−3.8	1.1450	−3.269
38.0	0.92	−2.1	0.8742	−1.772
40.0	0.66	−0.8	0.6503	−0.767
45.0	0.29	+0.3	0.2925	+0.264
50.0	0.12	+0.4	0.1258	+0.387
55.0	0.04	+0.3	0.0519	+0.300
60.0	0.01	+0.2	0.0199	+0.198
70.0	−0.01	+0.1	0.0116	+0.073
80.0	0.00	+0.0	−0.0118	+0.024

[a]Typical experimental error in ΔL is ± 0.02 mH and error in ΔR is $\pm 0.1\,\Omega$
[b]Using generalized current vortex formalism. scan02.dat

Table 3.3 Frequency Dependence

Change in coil impedance (due to the crack) as a function of frequency with the coil centred on the crack $X=0, Y=0$

	Experiment[a]		Theory[b]	
f (kHz)	ΔL (mH)	ΔR (Ω)	ΔL (mH)	ΔR (Ω)
0.110	0.04	−0.3	0.04453	−0.2874
0.126	0.06	−0.4	0.05799	−0.3756
0.159	0.09	−0.6	0.09081	−0.5922
0.200	0.13	−0.9	0.14004	−0.9235
0.251	0.20	−1.4	0.21420	−1.424
0.316	0.30	−2.2	0.32493	−2.187
0.398	0.46	−3.4	0.48576	−3.315
0.501	0.71	−5.1	0.71146	−4.927
0.631	1.01	−7.5	1.01793	−7.144
0.794	1.42	−10.5	1.41192	−10.00
1.000	1.91	−14.1	1.89313	−13.44
1.260	2.48	−18.3	2.43828	−17.12
1.590	3.08	−22.0	3.00399	−20.35
2.000	3.65	−24.2	3.51479	−22.10
2.510	4.08	−23.4	3.90924	−21.34
3.160	4.41	−19.4	4.14761	−17.18
3.980	4.51	−10.8	4.20842	−9.264
5.010	4.46	+2.2	4.11421	+1.987
6.310	4.27	+19.0	3.91192	+15.71
7.940	4.00	+38.1	3.65432	+30.67
10.000	3.72	+59.5	3.38314	+45.90

[a]There are three sources of error in the data of Table 3.3

(i) The typical measurement error in ΔL is ± 0.02 mH and in ΔR is $\pm 0.1\ \Omega$.

(ii) Deviations from ideal coil behaviour are negligible in both ΔL (less than 0.5 %) and ΔR (less than 1.5 %) over the entire frequency range studied.

(iii) Finite plate size effects also appear to be negligible (less than 1 %).

[b]Using generalized current vortex formalism. scan06.dat

BENCHMARK TESTS (4)

CRACKS IN A DOUBLE PLATE SYSTEM

S.K.Burke
DSTO Aeronautical Research Laboratory
PO Box 4331 Melbourne 3001
Australia

Summary

Experimental and theoretical results are given here for ΔZ due to a through-crack in a thin brass sheet in a double plate system. There are two data sets. Table 4.2 lists ΔZ due to a 'first layer' crack as a function of coil centre position X_C with $Y_C = 0$ (longitudinal scan) at a constant frequency of 1 kHz. Table 4.3 lists ΔZ due to a 'second layer' crack as a function of X_C with $Y_C = 0$ at the same frequency.

These data were used in the paper 'Eddy-current inspection of cracks in a multilayer conductor' [1]. The first-layer crack specimen was denoted F-1 and the second-layer crack specimen denoted S-1. The theory is a low frequency approximation so the agreement between theory and experiment becomes poorer as the frequency is increased above ≈ 3 kHz. Further details concerning the theory and experiment are given in Ref. [1].

References

[1] S.K.Burke *J.Appl.Phys* **67** 465–76 (1990)

Table 4.1 Test parameters[a]

The coil	
Inner radius (a_2)	9.33 ± 0.05 mm
Outer radius (a_1)	18.04 ± 0.05 mm
Length ($l_2 - l_1$)	10.05 ± 0.05 mm
Number of turns (N)	1910
Lift-off (l_1)	1.87 mm
The test specimens	
Double plate specimens denoted by S-1 and F-1 in Ref. [1]	
Conductivity ($\sigma_1 = \sigma_2$)	1.64 ± 0.02 x 10^7 S/m
Plate thickness ($t_1 = t_2$)	0.90 ± 0.01 mm
Midplane separation (d)	1.09 ± 0.01 mm
Gap thickness	0.19 ± 0.01 mm
The defect	
Length ($2c$)	44.4 ± 0.02 mm
Depth (h)	through-thickness slot in upper or lower plate
Width (w)	0.30 ± 0.01 mm
Other parameters	
Frequency	1000 Hz
Skin-depth at 1000 Hz	3.92 mm
Isolated coil inductance	84.2 ± 0.1 mH
Isolated coil DC resistance	260 Ω
Isolated coil resonant frequency	123.0 kHz
Theoretical calculation	
Using generalized current vortex formalism of Ref [1]	
Number of terms in Chebyshev series 50	

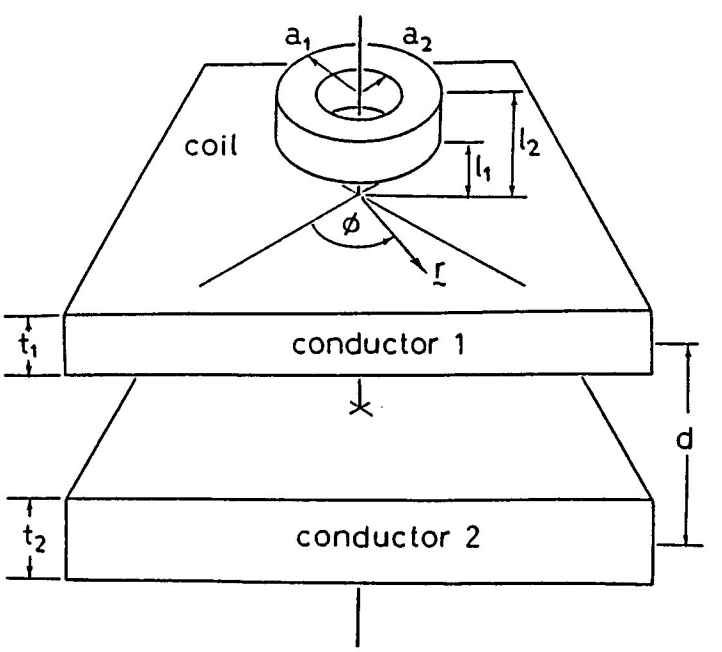

Figure 4.1 Eddy-current induction in system of two plates separated by an insulating gap The source field is provided by a circular air-cored coil.

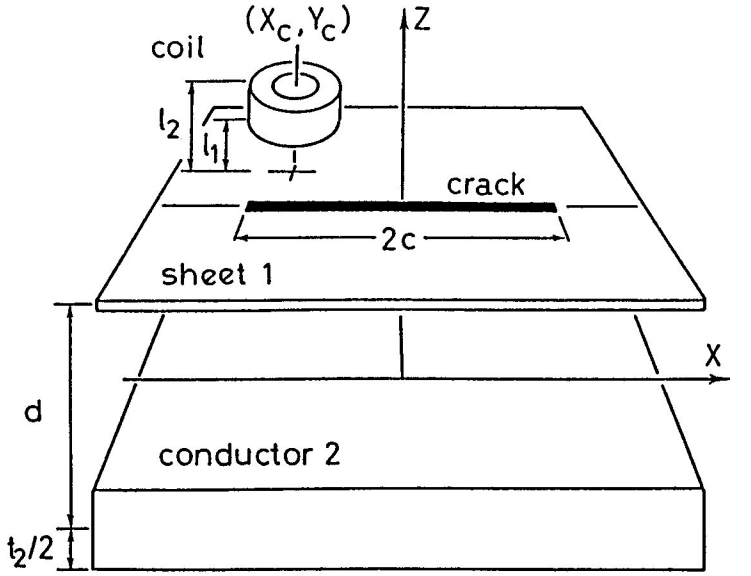

Figure 4.2 Eddy-current inspection of a first-layer crack

Figure 4.3 Eddy-current inspection of a second-layer crack

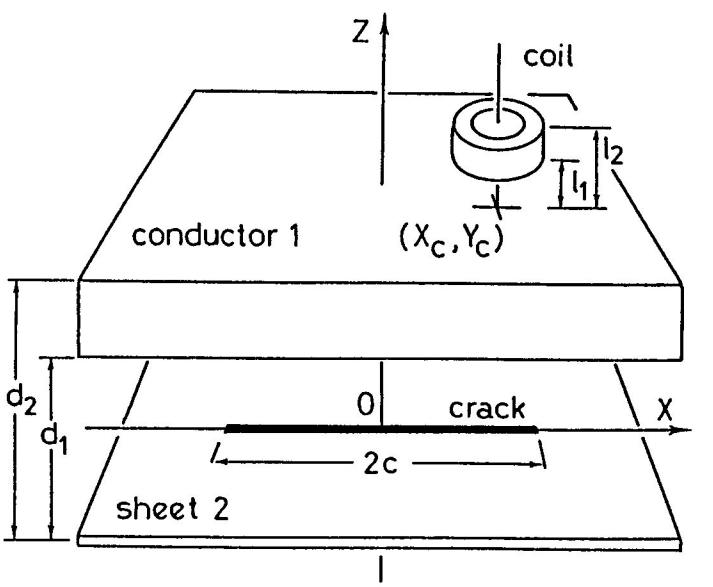

Table 4.2 First layer crack.

Change in coil impedance as a function of coil centre position X_C at a frequency of 1 kHz. Data have been folded onto the interval $X_C \geq 0$.

	Experiment[a]		Theory[b]	
X_C (mm)	ΔL (mH)	ΔR (Ω)	ΔL (mH)	ΔR (Ω)
0.0	1.84	−5.0	1.7566	−4.6137
2.0	1.84	−5.0	1.7616	−4.5826
4.0	1.86	−4.9	1.7749	−4.4724
6.0	1.89	−4.8	1.8057	−4.3492
8.0	1.95	−4.7	1.8619	−4.2735
10.0	2.04	−4.6	1.9444	−4.2715
12.0	2.14	−4.7	2.0484	−4.3390
14.0	2.26	−4.7	2.1521	−4.3867
16.0	2.35	−4.8	2.2414	−4.3922
18.0	2.40	−4.6	2.2837	−4.2088
20.0	2.39	−4.3	2.2827	−3.9634
22.0	2.33	−3.9	2.2242	−3.6049
24.0	2.21	−3.4	2.1081	−3.1742
26.0	2.01	−2.8	1.9213	−2.5631
28.0	1.76	−2.0	1.6764	−1.8409
30.0	1.47	−1.2	1.4011	−1.1265
32.0	1.16	−0.6	1.1175	−0.4806
34.0	0.87	+0.05	0.8327	+0.1137
36.0	0.61	+0.5	0.5837	+0.5179
38.0	0.40	+0.7	0.3872	+0.7084
40.0	0.25	+0.7	0.2409	+0.7394
45.0	0.06	+0.4	0.0605	+0.4764
50.0	0.01	+0.2	0.0099	+0.2248

[a]Typical experimental error in ΔL is ± 0.02 mH and error in ΔR is $\pm 0.1\,\Omega$
[b]Using generalized current vortex formalism, Burke (1990). scan33.dat

Table 4.3 Second layer crack.

Change in coil impedance as a function of coil centre position X_C at a frequency of 1 kHz. Data have been folded onto the interval $X_C \geq 0$.

	Experiment[a]		Theory[b]	
X_C (mm)	ΔL (mH)	ΔR (Ω)	ΔL (mH)	ΔR (Ω)
0.0	1.44	−1.5	1.4099	−1.3957
2.0	1.46	−1.5	1.4154	−1.3707
4.0	1.47	−1.4	1.4288	−1.2766
6.0	1.51	−1.3	1.4584	−1.1571
8.0	1.56	−1.1	1.5088	−1.0398
10.0	1.63	−1.0	1.5809	−0.9440
12.0	1.71	−0.9	1.6665	−0.8613
14.0	1.80	−0.8	1.7524	−0.7719
16.0	1.87	−0.7	1.8248	−0.6642
18.0	1.91	−0.6	1.8593	−0.4830
20.0	1.91	−0.4	1.8563	−0.2919
22.0	1.86	−0.1	1.8055	−0.0801
24.0	1.74	+0.1	1.7055	+0.1372
26.0	1.58	+0.4	1.5493	+0.3955
28.0	1.36	+0.7	1.3475	+0.6645
30.0	1.13	+0.9	1.1221	+0.8920
32.0	0.90	+1.1	0.8916	+1.0534
34.0	0.66	+1.3	0.6630	+1.1654
36.0	0.46	+1.2	0.4643	+1.1763
38.0	0.30	+1.2	0.3071	+1.0902
40.0	0.18	+1.0	0.1899	+0.9424
45.0	0.03	+0.6	0.0442	+0.5131
50.0	0.00	+0.3	0.0042	+0.2299

[a]Typical experimental error in ΔL is ± 0.02 mH and error in ΔR is $\pm 0.1\,\Omega$
[b]Using generalized current vortex formalism, Burke (1990). scan36.dat

BENCHMARK TESTS (5)

CRACKS IN A THIN PLATE: TANGENT COIL

S.K.Burke
DSTO Aeronautical Research Laboratory
PO Box 4331 Melbourne 3001
Australia

Summary

Experimental and theoretical results are given below for ΔZ due to a through-crack in a thin brass sheet using the tangent coil geometry. There are three data sets. The variation in ΔZ with coil centre position X_C at 2 kHz for $Y_C = 0$ and $\Theta = 0$ is given in Table 5.1, the frequency dependence of ΔZ with $X_C = Y_C = 0$ and $\Theta = 0$ is given in Table 5.3 and the variation of ΔZ with coil axis orientation Θ at 2 kHz with $X_C = Y_C = 0$ is given in Table 5.4. The experimental data for ΔL suffer from a small systematic error due to edge effects (no greater than 0.4 mH), these have been partially corrected in Table 5.1 and Table 5.2. No correction was attempted for the data of Table 5.4. The ΔR data do not suffer from these errors.

The generalized current vortex theory [1] is a low frequency approximation so the agreement between theory and experiment becomes poorer as the frequency is increased above $\approx$ 3 kHz. The 'hybrid' calculations are based on the generalized current vortex formalism but the exact uncracked plate fields are used instead of the thin plate approximations. This improves the accuracy of the calculations at higher frequencies.

References

[1] S.K.Burke and L.R.F.Rose *Proc.Roy.Soc.* **418A** 229–246 (1988)

Table 5.1 Test parameters[a]

The coil	
Inner radius (a_2)	9.33 ± 0.05 mm
Outer radius (a_1)	18.04 ± 0.05 mm
Length (b)	10.05 ± 0.05 mm
Number of turns (N)	1910
Lift-off parameter (d)	20.75 mm
The test specimen	
Conductivity (σ)	1.64 ± 0.02 x 10^7 S/m
Plate thickness	0.90 ± 0.01 mm
The defect	
Length ($2c$)	101.0 ± 0.2 mm
Depth (h)	through-thickness slot
Width (w)	0.30 ± 0.01 mm
Other parameters	
Frequency	2000 Hz
Skin-depth at 2000 Hz	2.77 mm
Isolated coil inductance	84.2 ± 0.1 mH
Isolated coil DC resistance	260 Ω
Isolated coil resonant frequency	123.0 kHz
Theoretical calculation	
Using generalized current vortex formalism of Ref [1]	
Number of terms in Chebyshev series 50	

[a]See also Fig. 5.1

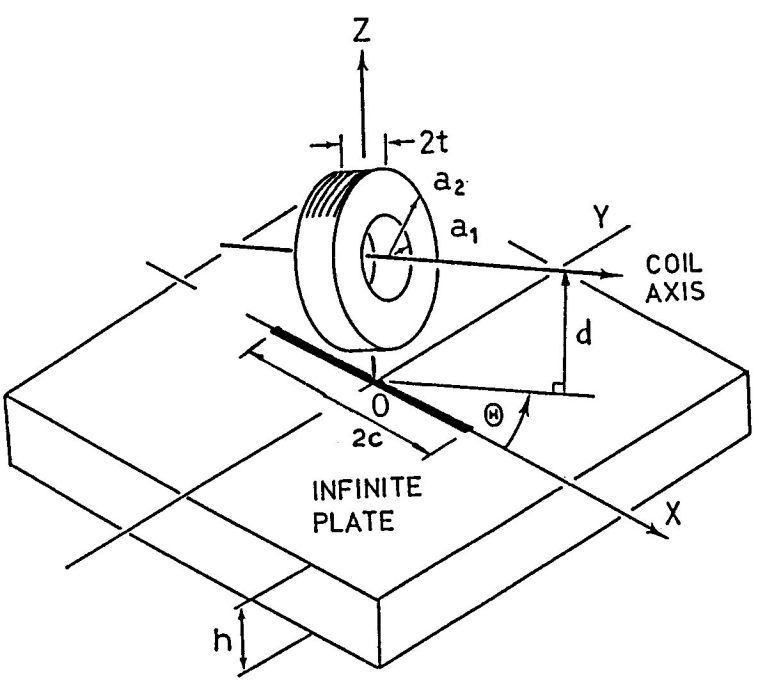

Figure 5.1 Schematic configuration for the measurement of ΔZ due a through-crack in a plate using the tangent coil geometry.

Table 5.2 Position Dependence

Change in coil impedance as a function of coil centre position X_C at a frequency of 2 kHz for the tangent coil geometry with $\Theta = 0$. Data have been folded onto the interval $X_C \geq 0$.

	Experiment[a]		Theory[b]		Theory[c]	
X_C (mm)	ΔL (mH)	ΔR (Ω)	ΔL (mH)	ΔR (Ω)	ΔL (mH)	ΔR (Ω)
0.0	1.01	−4.2	1.0045	−3.8432	1.0270	−3.9992
2.0	1.01	−4.2	1.0041	−3.8422	1.0266	−3.9983
4.0	1.00	−4.2	1.0030	−3.8392	1.0255	−3.9955
6.0	1.00	−4.2	1.0010	−3.8338	1.0235	−3.9906
8.0	1.00	−4.2	0.9982	−3.8259	1.0207	−3.9833
10.0	0.99	−4.2	0.9945	−3.8152	1.0168	−3.9735
12.0	0.99	−4.2	0.9896	−3.8015	1.0119	−3.9608
14.0	0.98	−4.1	0.9835	−3.7841	1.0057	−3.9446
16.0	0.98	−4.1	0.9760	−3.7620	0.9980	−3.9239
18.0	0.96	−4.1	0.9667	−3.7338	0.9885	−3.8972
20.0	0.94	−4.1	0.9552	−3.6982	0.9768	−3.8633
22.0	0.93	−4.0	0.9413	−3.6538	0.9626	−3.8206
24.0	0.90	−3.9	0.9244	−3.5987	0.9453	−3.7671
26.0	0.89	−3.9	0.9038	−3.5299	0.9242	−3.6996
28.0	0.85	−3.7	0.8789	−3.4429	0.8988	−3.6135
30.0	0.83	−3.5	0.8488	−3.3326	0.8678	−3.5032
32.0	0.78	−3.4	0.8123	−3.1935	0.8304	−3.3627
34.0	0.74	−3.1	0.7686	−3.0204	0.7856	−3.1864
36.0	0.67	−2.9	0.7167	−2.8083	0.7325	−2.9685
38.0	0.60	−2.6	0.6558	−2.5514	0.6701	−2.7026
40.0	0.53	−2.2	0.5855	−2.2464	0.5982	−2.3847
42.0	0.44	−1.8	0.5064	−1.8991	0.5174	−2.0206
44.0	0.36	−1.5	0.4212	−1.5358	0.4304	−1.6372
46.0	0.27	−1.2	0.3356	−1.2075	0.3431	−1.2883
48.0	0.21	−1.1	0.2577	−0.9786	0.2636	−1.0417
50.0	0.17	−1.0	0.1959	−0.8957	0.2004	−0.9477
52.0	0.14	−1.2	0.1556	−0.9556	0.1592	−1.0041
54.0	0.15	−1.3	0.1371	−1.0990	0.1401	−1.1502
56.0	0.15	−1.3	0.1353	−1.2401	0.1382	−1.2965
58.0	0.16	−1.4	0.1426	−1.3105	0.1459	−1.3703
60.0	0.17	−1.2	0.1520	−1.2841	0.1557	−1.3435
62.0	0.17	−1.0	0.1586	−1.1738	0.1629	−1.2285
64.0	0.17	−0.9	0.1607	−1.0106	0.1653	−1.0573
66.0	0.17	−0.7	0.1580	−0.8248	0.1628	−0.8618
68.0	0.16	−0.5	0.1513	−0.6387	0.1560	−0.6656
70.0	0.14	−0.3	0.1417	−0.4664	0.1462	−0.4838
75.0	0.11	−0.1	0.1118	−0.1390	0.1154	−0.1384
80.0	0.07	+0.0	0.0827	+0.0380	0.0851	+0.0474
85.0	0.06	+0.0	0.0589	+0.1143	0.0604	+0.1261

[a]Typical experimental error in ΔL is ± 0.02 mH and error in ΔR is $\pm 0.1\,\Omega$
[b]Using generalized current vortex formalism. scan58.dat
[c]Using hybrid generalized current vortex formulation. scan52.dat

Table 5.3 Frequency Dependence

Change in coil impedance as a function of frequency with the coil centered on the crack ($X_C = Y_C = 0$) for the tangent coil geometry with $\Theta = 0$.

	Experiment[a]		Theory[b]		Theory[c]	
f (Hz)	ΔL (mH)	ΔR (Ω)	ΔL (mH)	ΔR (Ω)	ΔL (mH)	ΔR (Ω)
251.	0.13	−0.4	0.1504	−0.5299	0.1490	−0.5322
316.	0.19	−0.7	0.2088	−0.7701	0.2070	−0.7749
398.	0.25	−1.1	0.2831	−1.0935	0.2812	−1.1029
501.	0.37	−1.3	0.3736	−1.5074	0.3718	−1.5249
631.	0.45	−2.0	0.4790	−2.0091	0.4781	−2.0405
794.	0.57	−2.7	0.5945	−2.5691	0.5954	−2.6214
1000.	0.69	−3.2	0.7140	−3.1352	0.7182	−3.2168
1260.	0.83	−3.9	0.8285	−3.6169	0.8375	−3.7331
1590.	0.93	−4.2	0.9287	−3.8964	0.9440	−4.0438
2000.	1.02	−4.2	1.0045	−3.8433	1.0270	−3.9992
2510.	1.07	−4.	1.0522	−3.3584	1.0818	−3.4710
3160.	1.11	−3.	1.0716	−2.3530	1.1076	−2.3255
3980.	1.10	−1.	1.0647	−0.8057	1.1052	−0.4839
5010.	1.07	+2.	1.0370	+1.2391	1.0792	+2.0782
6310.	1.04	+4.	0.9952	+3.7007	1.0363	+5.3685
7940.	1.00	+7.	0.9459	+6.4247	0.9832	+9.3389
10000.	0.93	+11.	0.8940	+9.2424	0.9255	+13.9912

[a]Typical experimental error in ΔL is ± 0.02 mH and error in ΔR is $\pm 0.1\,\Omega$
[b]Using generalized current vortex formalism. scan50.dat
[c]Using hybrid generalized current vortex formulation. scan51.dat

Table 5.4 Angle Dependence

Change in coil impedance as a function of coil axis orientation Θ with the coil centered on the crack. The frequency is 2 kHz. The data have been folded onto the interval $0 \leq \Theta \leq 180°$.

	Experiment[a]		Theory[b]		Theory[c]	
Θ(deg)	ΔL (mH)	ΔR (Ω)	ΔL (mH)	ΔR (Ω)	ΔL (mH)	ΔR (Ω)
0.	0.98	−4.2	1.0045	−3.8432	1.0270	−3.9991
10.	0.96	−4.1	0.9795	−3.7783	1.0015	−3.9318
20.	0.89	−3.9	0.9062	−3.5776	0.9264	−3.7234
30.	0.79	−3.5	0.7891	−3.2286	0.8065	−3.3608
40.	0.64	−3.0	0.6370	−2.7235	0.6509	−2.8356
50.	0.48	−2.4	0.4640	−2.0789	0.4740	−2.1649
60.	0.31	−1.5	0.2901	−1.3575	0.2963	−1.4139
70.	0.16	−0.8	0.1394	−0.6759	0.1424	−0.7040
80.	0.06	−0.3	0.0366	−0.1814	0.0374	−0.1889
90.	0.01	−0.0	0.0000	−0.0000	0.0000	−0.0000
100.	0.05	−0.3	0.0366	−0.1814	0.0374	−0.1889
110.	0.14	−0.7	0.1394	−0.6759	0.1424	−0.7040
120.	0.29	−1.5	0.2901	−1.3575	0.2963	−1.4139
130.	0.44	−2.1	0.4640	−2.0789	0.4740	−2.1649
140.	0.61	−2.8	0.6370	−2.7235	0.6509	−2.8356
150.	0.75	−3.3	0.7891	−3.2286	0.8065	−3.3608
160.	0.87	−3.7	0.9062	−3.5776	0.9264	−3.7234
170.	0.94	−3.9	0.9795	−3.7783	1.0015	−3.9318
180.	0.98	−4.1	1.0045	−3.8431	1.0270	−3.9991

[a]Typical experimental error in ΔL is ± 0.02 mH and error in ΔR is $\pm 0.1\,\Omega$. There is an estimated systematic error of 4 % (at most) in the experimental value of ΔL due to finite plate size effects.

[b]Using generalized current vortex formalism. scan57.dat

[c]Using hybrid generalized current vortex formulation. scan59.dat

Correction Factors for SRI International Open-Wire Line (OWL) Ground Constants Kit Data, 1970—1990

G. H. Hagn
Information and Telecommunications Sciences Center
Information, Telecommunications, and Automation Division
SRI International
1611 N. Kent Street, Arlington, VA 22209

This paper describes a correction to surface soil conductivity and relative permittivity data collected with the SRI International (SRI) open-wire line (OWL) ground constants measurement kit. An error has been found in the equations used to reduce the data on relative permittivity (ϵ_r) measured at numerous locations worldwide with the kit. This error also affected the conductivity (σ) and skin depth values (but not the dissipation factor values) published in earlier reports and papers from 1970 to May 1990.[1-4] The effect of the error was to overestimate these values, especially at lower frequencies. The error is not significant for low-loss soils (e.g., dry sand), but it is significant for high-loss soils. The error does not affect the published SRI generic ground constant curves,[1] which were based on data taken in the 1960s with an earlier version of the OWL kit.

The error was detected during comparative testing of the SRI OWL kit and the Eyring, Inc. inverted monopole ground constants kit in May 1990 at the Eyring site in Cedar Valley, UT. It was noticed that the conductivity and relative permittivity measured by the OWL kit were higher than the values measured in the same soil with the inverted monopole. Both kits used the same approximate equations for data reduction, except for determination of relative permittivity. The OWL kit equations computed relative permittivity as the ratio of the measured probe capacitive reactance in air to the measured capacitive reactance in the soil. In this formulation (which is based on the probe impedance data), the relative permittivity is computed as the ratio of the probe capacitance in the ground to the capacitance in air. This originally seemed to be an appropriate approximate approach when the probe length in the soil was well below resonance, and it seemed consistent with the definition of real effective relative permittivity. This approach is applicable for a soil that is a perfect dielectric (i.e., lossless), but is not correct for soil with a nonzero conductivity. As pointed out by R.W.P. King and G.S. Smith,[5] the ratio of probe susceptances is a more appropriate point of departure for deriving the approximate equation for ϵ_r than the ratio of probe reactances. The real part of probe impedance in the ground is a component of the imaginary part of probe admittance (i.e., the susceptance), and that is how the error came about.

The SRI OWL kit uses a multilength probe kit and a HP 4193A vector impedance meter to obtain measured probe impedances in the ground and in the air. The air values are used for calibration. If the probe impedance in air is given as $R_a + jX_a$, and the probe impedance in the ground is given as $R_g + jX_g$, then the old and new formulas for relative permittivity (ϵ_r) are:

$$\epsilon_r \text{ (old)} \cong \frac{X_a}{X_g}$$

$$\epsilon_r \text{ (new)} = \frac{X_g\,(R_a^2 + X_a^2)}{X_a\,(R_g^2 + X_g^2)} \cong \frac{X_a \bullet X_g}{R_g^2 + X_g^2} \quad \text{when } R_a^2 \ll X_a^2 \ .$$

These equations are approximations that are valid only for frequencies well below the first resonance of the probe in the ground. The low-loss OWL kit probes satisfy the condition

$$R_a^2 \ll X_a^2$$

over this usable frequency range. The old and new equations are equivalent when $R_g = 0$ (i.e., the soil is lossless).

A correction for the published relative permittivity and conductivity values obtained with the OWL kit from 1970 to May 1990 is:

$$\epsilon_r \text{ (new)} = \frac{\epsilon_r \text{ (old)}}{1 + (DF)^2}$$

$$\sigma \text{ (new)} = \frac{\sigma \text{ (old)}}{1 + (DF)^2} = \frac{\sigma \text{ (old)}}{\epsilon_r \text{(old)}} \bullet \epsilon_r \text{(new)} = \omega \epsilon_o\, \epsilon_r \text{(new)} \bullet DF$$

where

ϵ_r (new)	= Corrected value of ϵ_r
ϵ_r (old)	= Published value of ϵ_r
DF	= Dissipation factor = σ (old)/$\omega\ \epsilon_o\ \epsilon_r$ (old)
σ (old)	= Published values of conductivity, in S/m
ω	= 2π f = Radian frequency, f in Hz
ϵ_o	= 8.854×10^{-12} F/m = Permittivity of free space.

The DF can be computed using the old (published) values of ϵ_r and σ, or with the new (corrected) values, with equivalent results. The new (corrected) values of ϵ_r and σ are used to recompute the skin depth (SD), as follows:

$$SD = \frac{1}{\left[\left(\frac{\omega^4\,\mu^2\,\epsilon_o^2\,\epsilon_r^2\text{(new)}}{4} + \frac{\sigma^2\text{(new)}\,\omega^2\,\mu^2}{4}\right)^{1/2} - \frac{\omega^2\,\mu\,\epsilon_o\,\epsilon_r\text{(new)}}{2}\right]^{1/2}}, \text{ in m.}$$

where

μ = Magnetic permeability.

In most soils, $\mu = \mu_o = 4\pi \times 10^{-7}$ H/m.

I was concerned that some of the published MF and HF values of σ measured with the OWL kit were not monotonically increasing with increasing frequency (as expected from theory) for more lossy soils. I now believe that the error in the ϵ_r computation, when extended into the σ computation, caused this effect. I regret any problems that this error may have caused, and I appreciate the contribution of Mr. David Faust and Mr. Bruce Gilchrist of Eyring, Inc., Provo, UT, in helping to identify, clarify and resolve the matter.

REFERENCES

1. G.H. Hagn, "Ground Constants at High Frequencies (HF)," *Proceedings of Third Annual Review of Progress in Applied Computational Electromagnetics,* Monterey, CA, 24–26 March 1987. Reprinted inadvertently in *Proceedings of Fourth Annual Review of Progress* in Applied Computational Electromagnetics, Monterey, CA, 22–24 March 1988.

2. L.O. Harnish, M. Lee and G.H. Hagn, "Comparison of Measured and NEC–Calculated Characteristics of a Vertical Monopole with Buried Ground Radials," *Proceedings of Third Annual Review of Progress in Applied Computational Electromagnetics*, Monterey, CA, 24–26 March 1987.

3. G.H. Hagn, "HF Ground Constant Measurements at the Lawrence Livermore National Laboratory (LLNL) Field Site," Presented at the 4th Annual Review of Progress in Applied Computational Electromagnetics, Monterey, CA, 22–24 March 1988.

4. G.H. Hagn, "HF Ground Constant Measurements at the Lawrence Livermore National Laboratory (LLNL) Field Site," *Applied Computational Electromagnetics Society Journal and Newsletter*, Vol. 3, No. 2, pp. 131–165, Fall 1988.

5. R.W.P. King and G.S. Smith, *Antennas in Matter,* MIT Press, Cambridge, MA, 1981.

NEC-MOM RELATIVE RUN TIMES

Paul Elliot
ARCO Power Technologies, Inc.,
1250 24th St. NW, Suite.850
Washington, DC 20037 USA.

The NEC Method of Moments (NEC-MOM) computer code available from Lawrence Livermore Labs is widely used by ACES members. The plot shown below compares computer cpu run times to fill and factor the interaction matrix for different numbers of wire segments used in the geometry. These are plots of the run time formula given in the code manual. Each of the curves may also be closely approximated by

$$t = K N^3$$

where t is run time, N is number of segments, and K is some constant which depends on number of degrees of symmetry, presence of a ground plane, and of course which computer is used.

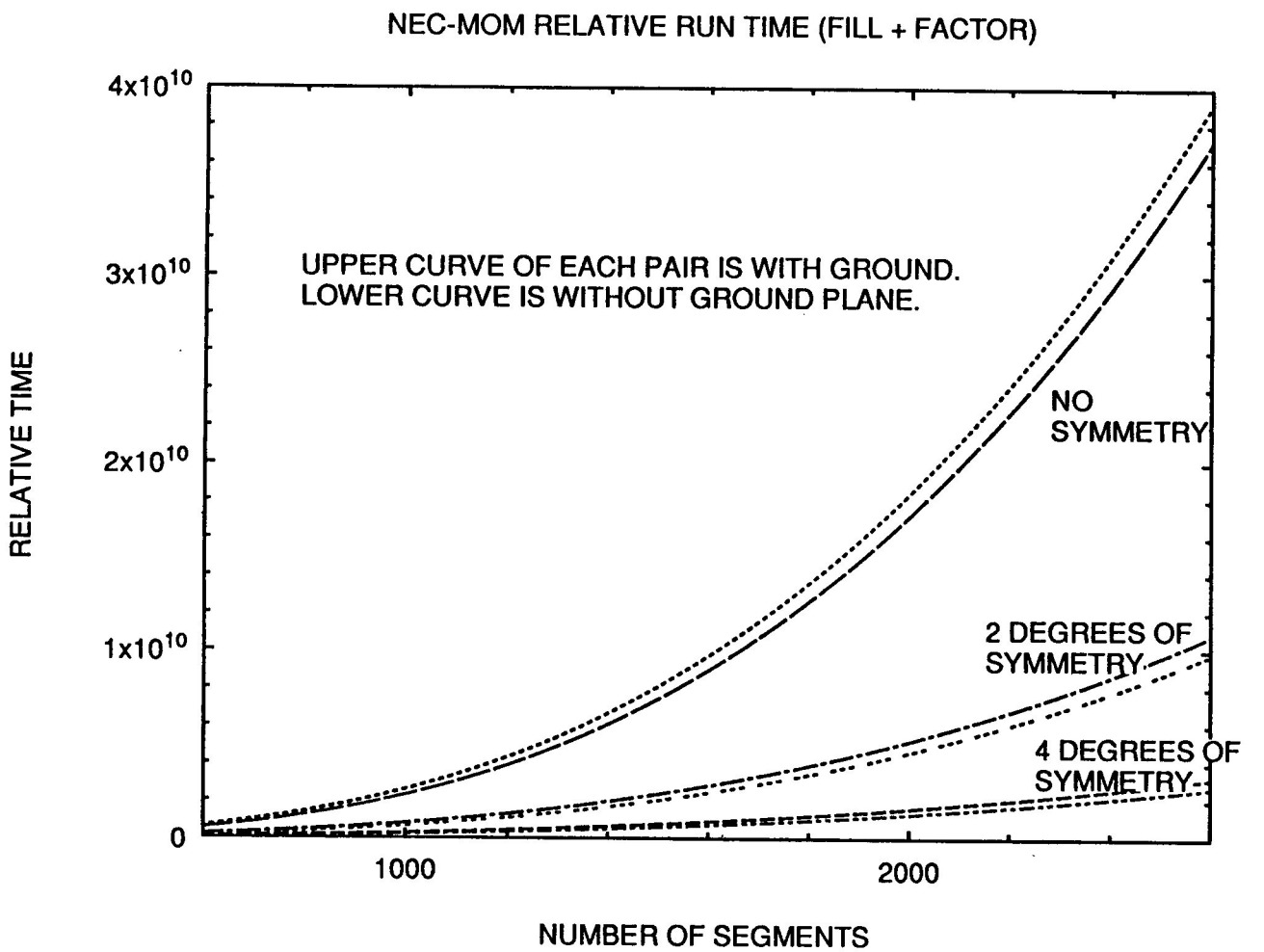

(UPDATED 11 MAY 1990) (CHANGES FROM MARCH 1990 ARE ITALICIZED)

BYLAWS OF THE

APPLIED COMPUTATIONAL ELECTROMAGNETICS SOCIETY

a California Nonprofit Public Benefit Corporation

ARTICLE 1. OFFICES

SECTION 1. PRINCIPAL OFFICE

The principal office of the corporation for the transaction of its business is located in Monterey County, California.

SECTION 2. CHANGE OF ADDRESS

The county of the corporation's principal office can be changed only by amendment of these Bylaws and not otherwise. The Board of Directors may, however, change the principal office from one location to another within the named county by noting the changed address and effective date below, and such changes of address shall not be deemed an amendment of these Bylaws:

_____ Dated:_____ 19 _____

_____ Dated:_____ 19 _____

_____ Dated:_____ 19 _____

SECTION 3. OTHER OFFICES

The corporation may also have offices at such other places, within or without the State of California, where it is qualified to do business, as its business may require and as the Board of Directors may, from time to time, designate.

ARTICLE 2. PURPOSES

SECTION 1. OBJECTIVES AND PURPOSES

The primary objectives and purposes of this corporation shall be scientific and educational. Specific purposes are to advance the theory and practice of electrical and electronics engineering and the allied arts and sciences by promoting close cooperation and the exchange of technical information among its members, affiliates, and the public.

ARTICLE 3. MEMBERS

SECTION 1. DETERMINATION AND RIGHTS OF MEMBERS

The corporation shall have three classes of members: industrial; individual; and student. No member may hold more than one membership in the corporation. Industrial members shall have only one vote and shall designate a named individual to cast their ballot. Except as expressly provided in or authorized by the Articles of Incorporation or Bylaws of this corporation, all memberships shall have the same rights, privileges, restrictions and conditions.

SECTION 2. QUALIFICATIONS OF MEMBERS

Membership in the Society shall be available to all persons or entities practicing in the field of electromagnetics.

SECTION 3. ADMISSION OF MEMBERS

Qualified applicants shall be admitted to membership upon making application therefor in writing and payment of the first annual dues as specified in the following sections of this Bylaw.

SECTION 4. FEES, DUES AND ASSESSMENTS

(a) No fee shall be charged for making application for membership in the corporation.

(b) The annual dues payable to the corporation by members shall be in such amount as may be determined from time to time by resolution of the Board of Directors.

(c) Memberships shall be nonassessable.

SECTION 5. NUMBER OF MEMBERS

There is no limit on the number of members the corporation may admit.

SECTION 6. MEMBERSHIP BOOK

The corporation shall keep a membership book containing the name and address of each member. Termination of the membership of any member shall be recorded in the book, together with the date of termination of such membership. Such book shall be kept at the corporation's principal office and shall be available for inspection by any Director or member of the corporation during regular business hours.

The record of names and addresses of the members of this corporation shall constitute the membership list of this corporation and shall not be used, in whole or part, by any person for any purpose not reasonably related to a member's interest as a member.

SECTION 7. NONLIABILITY OF MEMBERS

A member of this corporation is not, as such, personally liable for the debts, liabilities, or obligations of the corporation.

SECTION 8. NONTRANSFERABILITY OF MEMBERSHIPS

No member may transfer for value a membership or any right arising therefrom. All rights of membership cease upon the member's death.

SECTION 9. TERMINATION OF MEMBERSHIP

(a) Grounds for Termination. The membership of a member shall terminate upon the occurrence of any of the following events:

(1) Upon his or her notice of such termination delivered to the President or Secretary of the corporation personally or by mail, such membership to terminate upon the date of delivery of the notice or date of deposit in the mail.

(2) Upon a determination by the Board of Directors that the member has engaged in conduct materially and seriously prejudicial to the interest or purposes of the corporation.

(3) Upon a failure to renew his or her membership by paying dues on or before their due date, such termination to be effective thirty (30) days after a written notification of delinquency is given personally or mailed to such member by the Secretary of the corporation. A member may avoid such termination by paying the amount of delinquent dues within a thirty (30)-day period following the member's receipt of the written notification of delinquency.

b) Procedure for Expulsion. Following the determination that a member should be expelled under subparagraph (a)(2) of this section, the following procedure shall be implemented:

(1) A notice shall be sent by first-class or registered mail to the last address of the member as shown on the corporation's records, setting forth the expulsion and the reasons therefor. Such notice shall be sent at least fifteen (15) days before the proposed effective date of the expulsion.

(2) The member being expelled shall be given an opportunity to be heard, either orally or in writing, at a hearing to be held not less that five (5) days before the effective date of the proposed expulsion. The hearing will be held by the Board of Directors in accordance with the quorum and voting rules set forth in these Bylaws applicable to the meetings of the Board. The notice to the member of his or her proposed expulsion shall state the date, time, and place of the hearing on his or her proposed expulsion.

(3) Following the hearing, the Board of Directors shall decide whether or not the member should in fact be expelled, suspended, or sanctioned in some other way. The decision of the Board shall be final.

(4) Any person expelled from the corporation shall receive a refund of dues already paid. The refund shall be prorated to return only the unaccrued balance remaining for the period of the dues payment.

SECTION 10. RIGHTS ON TERMINATION OF MEMBERSHIP

All rights of a member in the corporation shall cease on termination of membership as herein provided.

SECTION 11. AMENDMENTS RESULTING IN THE TERMINATION OF MEMBERSHIPS

Notwithstanding any other provision of these Bylaws, if any amendment of the Articles of Incorporation or of the Bylaws of this corporation would result in the termination of all memberships or any class of memberships, then such amendment or amendments shall be effected only in accordance with the provisions of Section 5342 of the California Nonprofit Public Benefit Corporation Law.

ARTICLE 4. MEETINGS OF MEMBERS

SECTION 1. PLACE OF MEETINGS

Meetings of members shall be held at the principal office of the corporation or at such other place or places within or without the State of California as may be designated from time to time by resolution of the Board of Directors.

SECTION 2. ANNUAL MEETINGS

The members shall meet annually at a date and time designated by resolution of the Board of Directors for the purpose of electing Directors and transacting other business as may come before the meeting. Cumulative voting for the election of Directors shall not be permitted. The candidates receiving the highest number of votes up to the number of Directors to be elected shall be elected. Each voting member shall cast one vote, with voting being by ballot only. The annual meeting of members for the purpose of electing Directors shall be deemed a regular meeting and any reference in these Bylaws to regular meetings of members refers to this annual meeting.

One additional regular meeting of the members may be held during the remainder of the calendar year on such date and at such time and place as may be designated from time to time by resolution of the Board of Directors.

SECTION 3. SPECIAL MEETINGS OF MEMBERS

(a) Persons Who May Call Special Meetings of Members. Special meetings of the members shall be called by the Board of Directors or the President of the corporation. In addition, special meetings of the members for any lawful purpose may be called by five percent (5%) or more of the members.

SECTION 4. NOTICE OF MEETINGS

(a) Time of Notice. Whenever members are required or permitted to take action at a meeting, a written notice of the meeting shall be given by the Secretary of the corporation not less than ten (10) nor more than ninety (90) days before the date of the meeting to each member who, on the record date for the notice of the meeting, is entitled to vote thereat; provided, however, that if notice is given by mail, and the notice is not mailed by first-class, registered, or certified mail, that notice shall be given twenty (20) days before the meeting.

(b) Manner of Giving Notice. Notice of a members' meeting or any report shall be given either personally or by mail or other means of written communication, addressed to the member at the address of such member appearing on the books of the corporation or given by the member to the corporation for the purpose of notice; or if no address appears or is given, at the place where the principal office of the corporation is located or by publication of notice of the meeting at least once in a newspaper of general circulation in the county in which the principal office is located. Notice shall be deemed to have been given at the time when delivered personally or deposited in the mail or sent by telegram or other means of written communication.

(c) Contents of Notice. Notice of a membership meeting shall state the place, date, and time of the meeting and (1) in the case of a special meeting, the general nature of the business to be transacted, and no other business may be transacted, or (2) in the case of a regular meeting, those matters which the Board, at the time notice is given, intends to present for action by the members. Subject to any provision to the contrary contained in these Bylaws, however, any proper matter may be presented at a regular meeting for such action. The notice of any meeting of members at which Directors are to be elected shall include the names of all those who are nominees at the time notice is given to members.

(d) Notice of Meetings Called by Members. If a special meeting is called by members as authorized by these Bylaws, the request for the meeting shall be submitted in writing, specifying the general nature of the business proposed to be transacted and shall be delivered personally or sent by registered mail or by telegraph to the Chairman of the Board, President, Vice-President or Secretary of the corporation. The officer receiving the request shall promptly cause notice to be given to the members entitled to vote that a meeting will be held, stating the date of the meeting. The date for such meeting shall be fixed by the Board and shall not be less than thirty-five (35) nor more than ninety (90) days after the receipt of the request for the meeting by the officer. If the notice is not given within twenty (20) days after the receipt of the request, persons calling the meeting may give the notice themselves.

(e) Waiver of Notice of Meetings. The transactions of any meeting of members, however called and noticed, and wherever held, shall be as valid as though taken at a meeting duly held after regular call and notice, if a quorum is present either in person or by proxy, and if, either before or after the meeting, each of the persons entitled to vote, not present in person or by proxy, signs a written waiver of notice or a consent to the holding of the meeting or an approval of the minutes thereof. All such waivers, consents and approvals shall be filed with the corporate records or made a part of the minutes of the meeting. Waiver of notices or consents need not specify either the business to be transacted or the purpose of any regular or special meeting of members, except that if action is taken or proposed to be taken for approval of any of the matters specified in subparagraph (f) of this section, the waiver of notice or consent shall state the general nature of the proposal.

(f) Special Notice Rules for Approving Certain Proposals. If action is proposed to be taken or is taken with respect to the following proposals, such action shall be invalid unless unanimously approved by those entitled to vote or unless the general nature of the proposal is stated in the notice of meeting or in any written waiver of notice:

(1) Removal of directors without cause;
(2) Filling of vacancies on the Board by members;
(3) Amending the Articles of Incorporation; and
(4) An election to voluntarily wind up and dissolve the corporation.

SECTION 5. QUORUM FOR MEETINGS

A quorum shall consist of one-third (1/3) of the voting members of the corporation.

The members present at a duly called and held meeting at which a quorum is initially present may continue to do business notwithstanding the loss of a quorum at the meeting due to a withdrawal of members from the meeting provided that any action taken after the loss of a quorum must be approved by at least a majority of the members required to constitute a quorum.

In the absence of a quorum, any meeting of the members may be adjourned from time to time by the vote of a majority of the votes represented in person or by proxy at the meeting, but no other business shall be transacted at such meeting.

When a meeting is adjourned for lack of a sufficient number of members at the meeting or otherwise, it shall not be necessary to give any notice of the time and place of the adjourned meeting or of the business to be transacted at such meeting other than by announcement at the meeting at which the adjournment is taken of the time and place of the adjourned meeting. However, if after the adjournment a new record date is fixed for notice or voting, a notice of the adjourned meeting shall be given to each member who, on the record date for notice of the meeting, is entitled to vote at the meeting. A meeting shall not be adjourned for more than forty-five (45) days.

Notwithstanding any other provision of this Article, if this corporation authorizes members to conduct a meeting with a quorum of less than one-third (1/3) of the voting power, then, if less than one-third (1/3) of the voting power actually attends a regular meeting, in person or by proxy, then no action may be taken on a matter unless the general nature of the matter was stated in the notice of the regular meeting.

SECTION 6. MAJORITY ACTION AS MEMBERSHIP ACTION

Every act or decision done or made by a majority of voting members present in person or by proxy at a duly held meeting at which a quorum is present is the act of the members, unless the law, the Articles of Incorporation of this corporation, or these Bylaws require a greater number.

SECTION 7. VOTING RIGHTS

Each member is entitled to one vote on each matter submitted to a vote by the members. Voting at duly held meetings shall be by voice vote. Election of Directors, however, shall be by ballot.

SECTION 8. PROXY VOTING

Members entitled to vote shall have the right to vote either in person or by a written proxy executed by such person or by his or her duly authorized agent and filed with the Secretary of the corporation, provided, however, that no proxy shall be valid after eleven (11) months from the date of its execution unless otherwise provided in the proxy. In any case, however, the maximum term of any proxy shall be three (3) years from the date of its execution. No proxy shall be irrevocable and may be revoked following the procedures given in Section 5613(b) of the California Nonprofit Public Benefit Corporation Law.

All proxies shall state the general nature of the matter to be voted on and, in the case of a proxy given to vote for the election of Directors, shall list those persons who were nominees at the time the notice of the vote for election of Directors was given to the members. In any election of Directors, any proxy which is marked by a member "withhold" or otherwise marked in a manner indicating that the authority to vote for the election of Directors is withheld shall not be voted either for or against the election of a Director.

Proxies shall afford an opportunity for the member to specify a choice between approval and disapproval of each matter or group of related matters intended, at the time the proxy is distributed, to be acted upon at the meeting for which the proxy is solicited. The proxy shall also provide that when the person solicited specifies a choice with respect to any such matter, the vote shall be cast in accordance therewith.

SECTION 9. CONDUCT OF MEETINGS

Meetings of members shall be presided over by the President of the corporation or, in his or her absence, by the Vice- President of the corporation or, in the absence of all of these persons, by a Chairman chosen by a majority of the voting members, present in person or by proxy. The Secretary of the corporation shall act as Secretary of all meetings of members, provided that in his or her absence, the presiding officer shall appoint another person to act as Secretary of the meeting.

Meetings shall be governed by Roberts' Rules of Order, as such rules may be revised from time to time, insofar as such rules are not inconsistent with or in conflict with these Bylaws, with the Articles of Incorporation of this corporation, or with any provision of law.

SECTION 10. ACTION BY WRITTEN BALLOT WITHOUT A MEETING

Any action which may be taken at any regular or special meeting of members may be taken without a meeting if the corporation distributes a written ballot to every member entitled to vote on the matter. The ballot shall set forth the proposed action, provide an opportunity to specify approval or disapproval of each proposal, provide that where the person solicited specifies a choice with respect to any such proposal the vote shall be cast in accordance therewith, and provide a reasonable time within which to return the ballot to the corporation. Ballots shall be mailed or delivered in the manner required for giving notice of meeting specified in Section 4(b) of this Article.

All written ballots shall also indicate the number of responses needed to meet the quorum requirement and, except for ballots soliciting votes for the election of Directors, shall state the percentage of approvals necessary to pass the measure submitted. The ballots must specify the time by which they must be received by the corporation in order to be counted.

Approval of action by written ballot shall be valid only when the number of votes cast by ballot within the time period specified equals or exceeds the quorum required to be present at a meeting authorizing the action, and the number of approvals equals or exceeds the number of votes that would be required to approve the action at a meeting at which the total number of votes cast was the same as the number of votes cast by ballot.

Directors may be elected by written ballot. Such ballots for the election of Directors shall list the persons nominated at the time the ballots are mailed or delivered. If any such ballots are marked "withhold" or otherwise marked in a manner indicating that the authority to vote for the election of Directors is withheld, they shall not be counted as votes either for or against the election of a Director.

A written ballot may not be revoked after its receipt by the corporation or its deposit in the mail, whichever occurs first.

SECTION 11. REASONABLE NOMINATION AND ELECTION PROCEDURES

This corporation shall make available to members reasonable nomination and election procedures with respect to the election of Directors by members. Such procedures shall be reasonable given the nature, size and operations of the corporation, and shall include:

(a) A reasonable means of nominating persons for election as Directors.

(b) A reasonable opportunity for a nominee to communicate to the members the nominee's qualifications and the reasons for the nominee's candidacy.

(c) A reasonable opportunity for all nominees to solicit votes.

(d) A reasonable opportunity for all members to choose among the nominees.

Upon the written request by any nominee for election to the Board and the payment with such request of the reasonable costs of mailing (including postage) the corporation shall, within ten (10) business days after such request (provided payment has been made) mail to all members or such portion of them that the nominee may reasonably specify, any material which the nominee shall furnish and which is reasonably related to the election, unless the corporation within five (5) business days after the request allows the nominee, at the corporation's option, the right to do either of the following: (1) inspect and copy the record of all members' names, addresses and voting rights, at reasonable times, upon five (5) business days' prior written demand upon the corporation, which demand shall state the purpose for which the inspection rights are requested; or (2) obtain from the Secretary, upon written demand and payment of a reasonable charge, a list of the names, addresses and voting rights of those members entitled to vote for the election of Directors, as of the most recent record date for which it has been compiled or as of any date specified by the nominee subsequent to the date of demand. The demand shall state the purpose for which the list is requested and the membership list shall be made available on or before the later of ten (10) business days after the demand is received or after the date specified therein as the date as of which the list is to be compiled.

If the corporation distributes any written election material soliciting votes for any nominee for Director at the corporation's expense, it shall make available, at the corporation's expense, to each other nominee, in or with the same material, the same amount of space that is provided any other nominee, with equal prominence, to be used by the nominee for a purpose reasonably related to the election.

Generally, any person who is qualified to be elected to the Board of Directors shall be nominated at the annual meeting of members held for the purpose of electing directors by any member present at the meeting in person or by proxy. However, if the corporation has five hundred (500) or more members, any of the additional nomination procedures specified in subsections (a) and (b) of Section 5521 of the California Nonprofit Public Benefit Corporation Law may be used to nominate persons for election to the Board of Directors.

If this corporation has five thousand (5,000) or more members, then the nomination and election procedures specified in Section 5522 of the California Nonprofit Corporation Law shall be followed by this corporation in nominating and electing persons to the Board of Directors.

SECTION 12. ACTION BY UNANIMOUS WRITTEN CONSENT WITHOUT MEETING

Except as otherwise provided in these Bylaws, any action required or permitted to be taken by the members may be taken without a meeting, if all members shall individually or collectively consent in writing to the action. The written consent or consents shall be filed with the minutes of the proceedings of the members. The action by written consent shall have the same force and effect as the unanimous vote of the members.

SECTION 13. RECORD DATE FOR MEETINGS

The record date for purposes of determining the members entitled to notice, voting rights, written ballot rights, or any other right with respect to a meeting of members or any other lawful membership action, shall be fixed pursuant to Section 5611 of the California Nonprofit Public Benefit Corporation Law.

ARTICLE 5. DIRECTORS

SECTION 1. NUMBER

The corporation shall have nine (9) Directors and collectively they shall be known as the Board of Directors. The number may be changed by amendment of this Bylaw, or by repeal of this Bylaw and adoption of a new Bylaw, as provided in these Bylaws.

SECTION 2. POWERS

Subject to the provisions of the California Nonprofit Public Benefit Corporation Law and any limitations in the Articles of Incorporation and Bylaws relating to action required or permitted to be taken or approved by the members, if any, of this corporation, the activities and affairs of this corporation shall be conducted and all corporate powers shall be exercised by or under the direction of the Board of Directors.

SECTION 3. DUTIES

It shall be the duty of the Directors to:

(a) Perform any and all duties imposed on them collectively or individually by law, by the Articles of Incorporation of this corporation, or by these Bylaws.

(b) Appoint and remove, employ and discharge, and, except as otherwise provided in these Bylaws, prescribe the duties and fix the compensation, if any, of all officers, agents and employees of the corporation.

(c) Supervise all officers, agents and employees of the corporation to assure that their duties are performed properly.

(d) Meet at such times and places as required by these Bylaws.

(e) Register their addresses with the Secretary of the corporation, and notices of meetings mailed or telegraphed to them at such addresses shall be valid notices thereof.

SECTION 4. TERMS OF OFFICE

Directors shall be elected for a term of three years such terms to be staggered so that three Directors stand for election at each annual meeting. Unless the articles or these Bylaws provide otherwise, each Director, including a Director elected to fill a vacancy, shall hold office until the expiration of the term for which elected and until a successor has been elected and qualified.

SECTION 5. COMPENSATION

Directors shall serve without compensation except that they shall be allowed and paid their actual and necessary expenses incurred in attending Directors meetings. In addition, they shall be allowed reasonable advancement or reimbursement for expenses incurred in the performance of their regular duties as specified in Section 3 of this Article. Directors may not be compensated for rendering services to the corporation in any capacity other than Director unless such other compensation is reasonable and is allowable under the provisions of Section 6 of this Article.

SECTION 6. RESTRICTION REGARDING INTERESTED DIRECTORS

Notwithstanding any other provision of these Bylaws, not more than forty-nine percent (49%) of the persons serving on the Board may be interested persons. For purposes of this Section, "interested persons" means either:

(a) any person currently being compensated by the corporation for services rendered it within the previous twelve (12) months, whether as a full- or part-time officer or other employee, independent contractor, or otherwise, excluding any reasonable compensation paid to a Director as Director; or

(b) any brother, sister, ancestor, descendant, spouse, brother-in-law, sister-in-law, son-in-law, daughter-in-law, mother-in-law, or father-in-law of any such person.

SECTION 7. PLACE OF MEETINGS

Meetings shall be held at the principal office of the corporation unless otherwise provided by the Board or at such place within or without the State of California which has been designated from time to time by resolution of the Board of Directors. In the absence of such designation, any meeting not held at the principal office of the corporation shall be valid only if held on the written consent of all Directors given either before or after the meeting and filed with the Secretary of the corporation or after all Board members have been given written notice of the meeting as hereinafter provided for special meetings of the Board. Any meeting, regular or special, may be held by conference telephone or similar communications equipment, so long as all Directors participating in such meeting can hear one another.

SECTION 8. REGULAR AND ANNUAL MEETINGS

Regular meetings of Directors shall be held within one business day of the regular meetings of the members at a time designated by the Board of Directors.

SECTION 9. SPECIAL MEETINGS

Special meetings of the Board of Directors may be called by the President, the Vice-President, the Secretary, or by any two Directors, and such meetings shall be held at the place, within or without the State of California, designated by the person or persons calling the meeting, and in the absence of such designation, at the principal office of the corporation.

SECTION 10. NOTICE OF MEETINGS

Regular meetings of the Board may be held without notice. Special meetings of the Board shall be held upon four (4) days' notice by first-class mail or forty-eight (48) hours' notice delivered personally or by telephone or telegraph. If sent by mail or telegram, the notice shall be deemed to be delivered on its deposit in the mails or on its delivery to the telegraph company. Such notices shall be addressed to each Director at his or her address as shown on the books of the corporation. Notice of the time and place of holding an adjourned meeting need not be given to absent Directors if the time and place of the adjourned meeting are fixed at the meeting adjourned and if such adjourned meeting is held no more than twenty-four (24) hours from the time of the original meeting. Notice shall be given of any adjourned regular or special meeting to Directors absent from the original meeting if the adjourned meeting is held more than twenty-four (24) hours from the time of the original meeting.

SECTION 11. CONTENTS OF NOTICE

Notice of meetings not herein dispensed with shall specify the place, day and hour of the meeting. The purpose of any Board meeting need not be specified in the notice.

SECTION 12. WAIVER OF NOTICE AND CONSENT TO HOLDING MEETINGS

The transactions of any meeting of the Board, however called and noticed or wherever held, are as valid as though the meeting had been duly held after proper call and notice, provided a quorum, as hereinafter defined, is present and provided that either before or after the meeting each Director not present signs a waiver of notice, a consent to holding the meeting, or an approval of the minutes thereof. All such waivers, consents, or approvals, shall be filed with the corporate records or made a part of the minutes of the meeting.

SECTION 13. QUORUM FOR MEETINGS

A quorum shall consist of a majority of the Board of Directors.

Except as otherwise provided in these Bylaws or in the Articles of Incorporation of this corporation, or by law, no business shall be considered by the Board at any meeting at which a quorum, as hereinafter defined, is not present, and the only motion which the Chair shall entertain at such meeting is a motion to adjourn. However, a majority of the Directors present at such meeting may adjourn from time to time until the time fixed for the next regular meeting of the Board.

When a meeting is adjourned for lack of a quorum, it shall not be necessary to give any notice of the time and place of the adjourned meeting or of the business to be transacted at such meeting, other than by announcement at the meeting at which the adjournment is taken, except as provided in Section 10 of the Article.

The Directors present at a duly called and held meeting at which a quorum is initially present may continue to do business notwithstanding the loss of a quorum at the meeting due to a withdrawal of Directors from the meeting, provided that any action thereafter taken must be approved by at least a majority of the required quorum for such meeting or such greater percentage as may be required by law, or the Articles of Incorporation or Bylaws of this corporation.

SECTION 14. MAJORITY ACTION AS BOARD ACTION

Every act or decision done or made by a majority of the Directors present at a meeting duly held at which a quorum is present is the act of the Board of Directors, unless the Articles of Incorporation or Bylaws of this corporation, or provisions of the California Nonprofit Public Benefit Corporation Law, particularly those provisions relating to appointment of committees (Section 5212), approval of contracts or transactions

in which a Director has a material financial interest (Section 5233) and indemnification of Directors (Section 5238e), require a greater percentage or different voting rules for approval of a matter by the Board.

SECTION 15. CONDUCT OF MEETINGS

Meetings of the Board of Directors shall be presided over by the President of the corporation or, in his or her absence, by the Vice-President of the corporation or, in the absence of each of these persons, by a Chairman chosen by a majority of the Directors present at the meeting. The Secretary of the corporation shall act as Secretary of all meetings of the Board, provided that in his or her absence, the presiding officer shall appoint another person to act as Secretary of the meeting.

Meetings shall be governed by Roberts' Rules of Order, as such rules may be revised from time to time, insofar as such rules are not inconsistent with or in conflict with these Bylaws, with the Articles of Incorporation of this corporation, or with provision of law.

SECTION 16. ACTION BY UNANIMOUS WRITTEN CONSENT WITHOUT MEETING

Any action required or permitted to be taken by the Board of Directors under any provision of law may be taken without a meeting, if all members of the Board shall individually or collectively consent in writing to such action. For the purposes of this section only, "all members of the Board"

shall not include any "interested Director" as defined in Section 5233 of the California Nonprofit Public Benefit Corporation Law. Such written consent or consents shall be filed with the minutes of the proceedings of the Board. Such action by written consent shall have the same force and effect as the unanimous vote of the Directors. Any certificate or other document filed under any provision of law which relates to action so taken shall state that the action was taken by unanimous written consent of the Board of Directors without a meeting and that the Bylaws of this corporation authorize the Directors to so act, and such statement shall be prima facie evidence of such authority.

SECTION 17. VACANCIES

Vacancies on the Board of Directors shall exist (1) on the death, resignation or removal of any Director, and (2) whenever the number of authorized Directors is increased.

The Board of Directors may declare vacant the office of a Director who has been declared of unsound mind by a final order of court, or convicted of a felony, or been found by a final order or judgment of any court to have breached any duty under Section 5230 and following of the California Nonprofit Public Benefit Corporation Law.

If this corporation has any members, then, if the corporation has less than fifty (50) members, Directors may be removed without cause by a majority of all members, or, if the corporation has fifty (50) or more members, by vote of a majority of the votes represented at a membership meeting at which a quorum is present.

Any Director may resign effective upon giving written notice to the Chairman of the Board, the President, the Secretary or the Board of Directors, unless the notice specifies a later time for the effectiveness of such resignation. No Director may resign if the corporation would then be left without a duly elected Director or Directors in charge of its affairs, except upon notice to the Attorney General.

Vacancies on the Board may be filled by a majority of Directors then in office, whether or not less than a quorum, or by a sole remaining Director. If this corporation has members, however, vacancies created by the removal of a Director may be filled only by the approval of the members. The members, if any, of this corporation may elect a Director at any time to fill any vacancy not filled by the Directors.

A person elected to fill a vacancy as provided in this Section shall hold office until the expiration of the term for which elected and until a successor has been elected and qualified.

SECTION 18. NON-LIABILITY OF DIRECTORS

The Directors shall not be personally liable for the debts, liabilities, or other obligation of the corporation.

SECTION 19. INDEMNIFICATION BY CORPORATION OF DIRECTORS, OFFICERS, EMPLOYEES AND OTHER AGENTS

To the extent that a person, who is, or was, a Director, officer, employee or other agent of this corporation has been successful on the merits in defense of any civil, criminal, administrative or investigative proceeding brought to procure a judgment against such person by reason of the fact that he or she is, or was, an agent of the corporation, or has been successful in defense of any claim, issue or matter, therein, such person shall be indemnified against expenses actually and reasonably incurred by the person in connection with such proceeding.

If such person either settles any such claim or sustains a judgment against him or her, then indemnification against expenses, judgments, fines, settlements and other amounts reasonably incurred in connection with such proceedings shall be provided by this corporation but only to the extent allowed by, and in accordance with the requirements of, Section 5238 of the California Nonprofit Public Benefit Corporation Law.

SECTION 20. INSURANCE FOR CORPORATE AGENTS

The Board of Directors may adopt a resolution authorizing the purchase and maintenance of insurance on behalf of any agent of the corporation (including a Director, officer, employee or other agent of the corporation) against any liability other than for violating provisions of law relating to self-dealing (Section 5233 of the California Nonprofit Public Benefit Corporation Law) asserted against or incurred by the agent in such capacity or arising out of the agent's status as such, whether or not the corporation would have the power to indemnify the agent against such liability under the provisions of Section 5238 of the California Nonprofit Public Benefit Corporation Law.

ARTICLE 6. OFFICERS

SECTION 1. NUMBER OF OFFICERS

The officers of this corporation shall be a President, a Vice- President, a Secretary and a chief financial officer who shall be designated the Treasurer. The corporation may also have, as determined by the Board of Directors, Assistant Secretaries, Assistant Treasurers, or other officers. Any number of offices may be held by the same person except that neither the Vice-President, the Secretary nor the Treasurer may serve as the President.

SECTION 2. QUALIFICATION, ELECTION, AND TERM OF OFFICE

The President, Vice-President, Secretary and Treasurer shall be elected by the Board of Directors from among the serving Directors. The term of office shall be two years. Should an officer's term as Director expire prior to the expiration of his or her term as an elected officer, his or her position will be deemed vacant and will be filled from among the serving Directors. Officers elected to fill vacancies shall hold office until expiration of the term for which elected and until a successor has been elected and qualified.

SECTION 3. SUBORDINATE OFFICERS

The Board of Directors may appoint such other officers or agents as it may deem desirable, and such officers shall serve such terms, have such authority, and perform such duties as may be prescribed from time to time by the Board of Directors.

SECTION 4. REMOVAL AND RESIGNATION

Any officer may be removed, either with or without cause, by the Board of Directors, at any time. Any officer may resign at any time by giving written notice to the Board of Directors or to the President or Secretary of the corporation. Any such resignation shall take effect at the date of the receipt of such notice or at any later date specified therein, and, unless otherwise specified therein, the acceptance of such resignation shall not be necessary to make it effective. The above provisions of this Section shall be superseded by any conflicting terms of a contract which has been approved or ratified by the Board of Directors relating to the employment of any officer of the corporation.

SECTION 5. VACANCIES

Any vacancy caused by the death, resignation, removal, disqualification, or otherwise, of any officer shall be filled by the Board of Directors. In the event of a vacancy in any office other than that of President, such vacancy may be filled temporarily by appointment by the President until such time as the Board shall fill the vacancy. Vacancies occurring in offices of officers appointed at the discretion of the Board may or may not be filled as the Board shall determine.

SECTION 6. DUTIES OF PRESIDENT

The President shall be the chief executive officer of the corporation and shall, subject to the control of the Board of Directors, supervise and control the affairs of the corporation and the activities of the officers. He or she shall perform all duties incident to his or her office and such other duties as may be required by law, by the Articles of Incorporation of this corporation, or by these Bylaws, or which may be prescribed from time to time by the Board of Directors. Unless another person is specifically appointed as Chairman of the Board of Directors, he or she shall preside at all meetings of the Board of Directors. If applicable, the President shall preside at all meetings of the members. Except as otherwise expressly provided by law, by the Articles of Incorporation, or by these Bylaws, he or she shall, in the name of the corporation, execute such deeds, mortgages, bonds, contracts, checks, or other instruments which may from time to time be authorized by the Board of Directors.

SECTION 7. DUTIES OF VICE-PRESIDENT

In the absence of the President, or in the event of his or her inability or refusal to act, the Vice-President shall perform all the duties of the President, and when so acting shall have all the powers of, and be subject to all the restrictions on, the President. The Vice-President shall have other powers and perform such other duties as may be prescribed by law, by the Articles of Incorporation, or by these Bylaws, or as may be prescribed by the Board of Directors.

SECTION 8. DUTIES OF SECRETARY

The Secretary shall:

Certify and keep at the principal office of the corporation the original, or a copy, of these Bylaws as amended or otherwise altered to date.

Keep at the principal office of the corporation or at such other place as the Board may determine, a book of minutes of all meetings of the Directors, and, if applicable, meetings of committees of Directors and of members, recording therein the time and place of holding, whether regular or special, how called, how notice thereof was given, the names of those present or represented at the meeting, and the proceedings thereof.

See that all notices are duly given in accordance with the provisions of these Bylaws or as required by law.

Be custodian of the records and of the seal of the corporation and see that the seal is affixed to all duly executed documents, the execution of which on behalf of the corporation under its seal is authorized by law or by these Bylaws.

Keep at the principal office of the corporation a membership book containing the name and address of each and any members, and, in the case where any membership has been terminated, he or she shall record such fact in the membership book together with the date on which such membership ceased.

Exhibit at all reasonable times to any Director of the corporation, or to his or her agent or attorney, on request therefor, the Bylaws, the membership book, and the minutes of the proceedings of the Directors of the corporation.

In general, perform all duties incident to the office of Secretary and such other duties as may be required by law, by the Articles of Incorporation of this corporation, or by these Bylaws, or which may be assigned to him or her from time to time by the Board of Directors.

SECTION 9. DUTIES OF TREASURER

Subject to the provisions of these Bylaws relating to the "Execution of Instruments, Deposits and Funds," the Treasurer shall:

Have charge and custody of, and be responsible for, all funds and securities of the corporation, and deposit all such funds in the name of the corporation in such banks, trust companies, or other depositories as shall be selected by the Board of Directors.

Receive, and give receipt for, monies due and payable to the corporation from any source whatsoever.

Disburse or cause to be disbursed the funds of the corporation as may be directed by the Board of Directors, taking proper vouchers for such disbursements.

Keep and maintain adequate and correct accounts of the corporation's properties and business transactions, including accounts of its assets, liabilities, receipts, disbursements, gains and losses.

Exhibit at all reasonable times the books of account and financial records to any Director of the corporation, or to his or her agent or attorney, on request therefor.

Render to the President and Directors, whenever requested, an account of any or all of his or her transactions as Treasurer and of the financial condition of the corporation.

Prepare, or cause to be prepared, and certify, or cause to be certified, the financial statements to be included in any required reports.

In general, perform all duties incident to the office of Treasurer and such other duties as may be required by law, by the Articles of Incorporation of the corporation, or by these Bylaws, or which may be assigned to him or her from time to time by the Board of Directors.

SECTION 10. COMPENSATION

The salaries of the officers, if any, shall be fixed from time to time by resolution of the Board of Directors, and no officer shall be prevented from receiving such salary by reason of the fact that he or she is also a Director of the corporation, provided, however, that such compensation paid a Director for serving as an officer of this corporation shall only be allowed if permitted under the provisions of ARTICLE 5, Section 6, of these Bylaws. In all cases, any salaries received by officers of this corporation shall be reasonable and given in return for services actually rendered the corporation which relate to the performance of the charitable or public purposes of this corporation.

ARTICLE 7. COMMITTEES

SECTION 1. EXECUTIVE COMMITTEE

The Board of Directors may, by a majority vote of Directors then in office, designate two (2) or more of its members (who may also be serving as officers of this corporation) to constitute an Executive Committee and delegate to such Committee any of the powers and authority of the Board in the management of the business and affairs of the corporation, except with respect to:

(a) The approval of any action which, under law or the provisions of these Bylaws, requires the approval of the members or of a majority of all of the members.

(b) The filling of vacancies on the Board or on any committee which has the authority of the Board.

(c) The fixing of compensation of the Directors for serving on the Board or on any committee.

(d) The amendment or repeal of Bylaws or the adoption of new Bylaws.

(e) The amendment or repeal of any resolution of the Board which by its express terms is not so amendable or repealable.

(f) The appointment of committees of the Board or the members, thereof.

(g) The expenditure of corporate funds to support a nominee for Director after there are more people nominated for Director than can be elected.

(h) The approval of any transaction to which this corporation is a party and in which one or more of the Directors has a material financial interest, except as expressly provided in Section 5233(d)(3) of the California Nonprofit Public Benefit Corporation Law.

By a majority vote of its members then in office, the Board may at any time revoke or modify any or all of the authority so delegated, increase or decrease but not below two (2) the number of its members, and fill vacancies therein from the members of the Board. The Committee shall keep regular minutes of its proceedings, cause them to be filed with the corporate records, and report the same to the Board from time to time as the Board may require.

SECTION 2. OTHER COMMITTEES

The corporation shall have such other committees as may from time to time be designated by resolution of the Board of Directors. Such other committees may consist of persons who are not also members of the Board. These additional committees shall act in an advisory capacity only to the Board and shall be clearly titled as "advisory" committees.

SECTION 3. MEETINGS AND ACTION OF COMMITTEES

Meetings and action of committees shall be governed by, noticed, held and taken in accordance with the provisions of these Bylaws concerning meetings of the Board of Directors, with such changes in context of such Bylaw provisions as are necessary to substitute the committee and its members for the Board of Directors and its members, except that the time for regular meetings of committees may be fixed by resolution of the Board of Directors or by the committee. The time for special meetings of committees may also be fixed by the Board of Directors. The Board of Directors may also adopt rules and regulations pertaining to the conduct of meetings of committees to the extent that such rules and regulations are not inconsistent with the provisions of these Bylaws.

ARTICLE 8. EXECUTION OF INSTRUMENTS, DEPOSITS AND FUNDS

SECTION 1. EXECUTION OF INSTRUMENTS

The Board of Directors, except as otherwise provided in these Bylaws, may by resolution authorize any officer or agent of the corporation to enter into any contract or execute and deliver any instrument in the name of and on behalf of the corporation, and such authority may be general or confined to specific instances. Unless so authorized, no officer, agent, or employee shall have any power or authority to bind the corporation by any contract or engagement or to pledge its credit or to render it liable monetarily for any purpose or in any amount.

SECTION 2. CHECKS AND NOTES

Except as otherwise specifically determined by resolution of the Board of Directors, or as otherwise required by law, checks, drafts, promissory notes, orders for the payment of money, and other evidence of indebtedness of the corporation shall be signed by the Treasurer and countersigned by the President of the corporation.

SECTION 3. DEPOSITS

All funds of the corporation shall be deposited from time to time to the credit of the corporation in such banks, trust companies, or other depositories as the Board of Directors may select.

SECTION 4. GIFTS

The Board of Directors may accept on behalf of the corporation any contribution, gift, bequest, or devise for the charitable or public purposes of this corporation.

ARTICLE 9. CORPORATE RECORDS, REPORTS AND SEAL

SECTION 1. MAINTENANCE OF CORPORATE RECORDS

The corporation shall keep at its principal office in the State of California:

(a) Minutes of all meetings of Directors, committees of the Board and, if this corporation has members, of all meetings of members, indicating the time and place of holding such meetings, whether regular or special, how called, the notice given, and the names of those present and the proceedings thereof.

(b) Adequate and correct books and records of accounts, including accounts of its properties and business transactions and accounts of its assets, liabilities, receipts, disbursements, gains and losses.

(c) A record of its members, if any, indicating their names and addresses and, if applicable, the class of membership held by each member and the termination date of any membership.

(d) A copy of the corporation's Articles of Incorporation and Bylaws as amended to date, which shall be open to inspection by the members, if any, of the corporation at all reasonable times during office hours.

SECTION 2. CORPORATE SEAL

The Board of Directors may adopt, use, and at will alter, a corporate seal. Such seal shall be kept at the principal office of the corporation. Failure to affix the seal to corporate instruments, however, shall not affect the validity of any such instrument.

SECTION 3. DIRECTORS' INSPECTION RIGHTS

Every Director shall have the absolute right at any reasonable time to inspect and copy all books, records and documents of every kind and to inspect the physical properties of the corporation.

SECTION 4. MEMBERS' INSPECTION RIGHTS

If this corporation has any members, then each and every member shall have the following inspection rights, for a purpose reasonably related to such person's interest as a member:

(a) To inspect and copy the record of all members' names, addresses and voting rights, at reasonable times, upon five (5) business days' prior written demand on the corporation, which demand shall state the purpose for which the inspection rights are requested.

(b) To obtain from the Secretary of the corporation, upon written demand and payment of a reasonable charge, a list of the names, addresses and voting rights of those members entitled to vote for the election of Directors as of the most recent record date for which the list has been compiled or as of the date specified by the member subsequent to the date of demand. The demand shall state the purpose for which the list is requested. The membership list shall be made available on or before the later of ten (10) business days after the demand is received or after the date specified therein as of which the list is to be compiled.

(c) To inspect at any reasonable time the books, records, or minutes of proceedings of the members or of the Board or committees of the Board, upon written demand on the corporation by the member, for a purpose reasonably related to such person's interests as a member.

SECTION 5. RIGHT TO COPY AND MAKE EXTRACTS

Any inspection under the provisions of this Article may be made in person or by agent or attorney and the right to inspection includes the right to copy and make extracts.

SECTION 6. ANNUAL REPORT

The Board shall cause an annual report to be furnished not later than one hundred and twenty (120) days after the close of the corporation's fiscal year to all Directors of the corporation and, if this corporation has members, to any member who requests it in writing, which report shall contain the following information in appropriate detail:

(a) The assets and liabilities, including the trust funds, of the corporation as of the end of the fiscal year.

(b) The principal changes in assets and liabilities, including trust funds, during the fiscal year.

(c) The revenue or receipts of the corporation, both unrestricted and restricted to particular purposes, for the fiscal year.

(d) The expenses or disbursements of the corporation, for both general and restricted purposes, during the fiscal year.

(e) Any information required by Section 7 of this Article.

The annual report shall be accompanied by any report thereon of independent accountants, or, if there is no such report, the certificate of an authorized officer of the corporation that such statements were prepared without audit from the books and records of the corporation.

If this corporation has members, then, if this corporation receives TWENTY-FIVE THOUSAND DOLLARS ($25,000), or more, in gross revenues or receipts during the fiscal year, this corporation shall automatically send the above annual report to all members, in such manner, at such time, and with such contents, including an accompanying report from independent accountants or certification of a corporate officer, as specified by the above provisions of this Section relating to the annual report.

SECTION 7. ANNUAL STATEMENT OF SPECIFIC TRANSACTIONS TO MEMBERS

This corporation shall mail or deliver to all directors and any and all members a statement within one hundred and twenty (120) days after the close of its fiscal year which briefly describes the amount and circumstances of any indemnification or transaction of the following kind:

(a) Any transaction in which the corporation, or its parent or its subsidiary was a party, and in which either of the following had a direct or indirect material financial interest:

(1) any director or officer of the corporation, or its parent or subsidiary (a mere common directorship shall not be considered a material financial interest); or

(2) any holder of more than ten percent (10%) of the voting power of the corporation, its parent or its subsidiary.

The above statement need only be provided with respect to a transaction during the previous fiscal year involving more than FIFTY THOUSAND DOLLARS ($50,000) or which was one of a number of transactions with the same person involving, in the aggregate, more than FIFTY THOUSAND DOLLARS ($50,000).

Similarly, the statement need only be provided with respect to indemnifications or advances aggregating more than TEN THOUSAND DOLLARS ($10,000) paid during the previous fiscal year to any Director or officer, except that no such statement need be made if such indemnification was approved by the members pursuant to Section 5238(e)(2) of the California Nonprofit Public Benefit Corporation Law.

Any statement required by this Section shall briefly describe the names of the interested persons involved in such transactions, stating each person's relationship to the corporation, the nature of such person's interest in the transaction and, where practical, the amount of such interest; provided, that in the case of a transaction with a partnership of which such person is a partner, only the interest of the partnership need be stated.

If this corporation has any members and provides all members with an annual report according to the provision of Section 6 of this Article, then such annual report shall include the information required by this Section.

ARTICLE 10. FISCAL YEAR

SECTION 1. FISCAL YEAR OF THE CORPORATION

The fiscal year of the corporation shall begin on the 1st of January and end on the 31st of December in each year.

ARTICLE 11. BYLAWS

SECTION 1. AMENDMENT

Subject to any provision of law applicable to the amendment of Bylaws of public benefit nonprofit corporations, these Bylaws, or any of them, may be altered, amended, or repealed and new Bylaws adopted as follows:

(a) subject to the power of the members, if any, to change or repeal these Bylaws under Section 5150 of the Corporations Code, by approval of the Board of Directors unless the Bylaw amendment would materially and adversely affect the rights of members, if any, as to voting or transfer, provided, however, if this corporation has admitted any members, then a Bylaw specifying or changing the fixed number of Directors of the corporation, the maximum or minimum number of Directors, or changing from a fixed to variable Board or vice versa, may not be adopted, amended; or repealed except as provided in subparagraph (b) of this section; or

(b) by approval of the members, if any, of this corporation.

ARTICLE 12. AMENDMENT OF ARTICLES

SECTION 1. AMENDMENT OF ARTICLES BEFORE ADMISSION OF MEMBERS

Before any members have been admitted to the corporation, any amendment of the Articles of Incorporation may be adopted by approval of the Board of Directors.

SECTION 2. AMENDMENT OF ARTICLES AFTER ADMISSION OF MEMBERS

After members, if any, have been admitted to the corporation, amendment of the Articles of Incorporation may be adopted by the approval of the Board of Directors and by the approval of the members of this corporation.

SECTION 3. CERTAIN AMENDMENTS

Notwithstanding the above Sections of this Article, this corporation shall not amend its Articles of Incorporation to alter any statement which appears in the original Articles of Incorporation and of the names and addresses of the first Directors of this corporation nor the name and address of its initial agent, except to correct an error in such statement or to delete either statement after the corporation has filed a "Statement by a Domestic Non-Profit Corporation" pursuant to Section 6210 of the California Nonprofit Corporation Law.

ARTICLE 13. PROHIBITION AGAINST SHARING CORPORATE PROFITS AND ASSETS

SECTION 1. PROHIBITION AGAINST SHARING CORPORATE PROFITS AND ASSETS

No member, Director, officer, employee, or other person connected with this corporation, or any private individual, shall receive at any time any of the net earnings or pecuniary profit from the operations of the corporation, provided, however, that this provision shall not prevent payment to any such person or reasonable compensation for services performed for the corporation in effecting any of its public or charitable purposes, provided that such compensation is otherwise permitted by these Bylaws and is fixed by resolution of the Board of Directors; and no such person or persons shall be entitled to share in the distribution of, and shall not receive, any of the corporate assets on dissolution of the corporation. All members, if any, of the corporation shall be deemed to have expressly consented and agreed that on such dissolution or winding up of the affairs of the corporation, whether voluntarily or involuntarily, the assets of the corporation, after all debts have been satisfied, then remaining in the hands of the Board of Directors, shall be distributed as required by the Articles of Incorporation of this corporation and not otherwise.

WRITTEN CONSENT OF DIRECTORS ADOPTING BYLAWS

We, the undersigned, are all of the persons named as the initial Directors of APPLIED COMPUTATIONAL ELECTROMAGNETICS SOCIETY, a California nonprofit corporation, and, pursuant to the authority granted to the Directors by these Bylaws to take action by unanimous written consent without a meeting, consent to, and hereby do, adopt the foregoing Bylaws, consisting of 20 pages, as the Bylaws of this corporation.

Dated:_____ _____
Director

Dated:_____ _____
Director

Dated:_____ _____
Director

Dated:_____ _____
Director

Dated:_____ _____
Director

Dated:_____ _____
Director

Dated:_____ _____
Director

Dated:_____ _____
Director

Dated:_____ _____
Director

CERTIFICATE

This is to certify that the foregoing is a true and correct copy of the Bylaws of the corporation named in the title thereto and that such Bylaws were duly adopted by the Board of Directors of said corporation on the date set forth above.

Dated:_____ _____
Secretary

JOINT ACES/TEAM INTERNATIONAL WORKSHOP
on
BENCHMARK PROBLEMS IN COMPUTATIONAL ELECTROMAGNETICS
Sorrento, Italy, July 1991

The Applied Computational Electromagnetics Society (ACES) will join with TEAM (Testing Electromagnetics Analysis Methods) to conduct a workshop on benchmark problems in computational electromagnetics. Solutions to benchmark problems, as obtained from various computer codes, will be compared with results obtained by measurement or by analytic solution. The workshop follows the Compumag Conference, which is scheduled for 7-11 July 1991, also in Sorrento.

The Joint Workshop provides an opportunity for participants to present brief, informal descriptions of their methods, with emphasis on new work and on capability or application extension to existing computer codes and models. These presentations enable participants to contribute to the development of universal code performance standards, modeling guidelines, computational electromagnetics data bases, and tools for validation of codes and models.

Solutions will be presented for the TEAM Workshop Set, Round 3 and for the ACES Collection of Canonical Problems -- Set 1. These problems represent diverse applications:

- high as well as low frequencies
- penetrable, as well as perfectly conducting bodies
- nondestructive evaluation, radar cross section, inverse scattering, coupled, and non-linear problems
- transient as well as steady-state waveforms

Following the presentation of the solutions for existing problems, there will be a discussion of these solutions and an opportunity to propose new problems for future workshops. The official Joint Workshop language is English.

The TEAM Workshop Set, Round 3, can be obtained from Dr. Larry Turner, Argonne National Laboratory, Bldg. 362, 9700 Cass Avenue, Argonne, IL 60439, USA. This publication is available at no charge.

The ACES Collection of Canonical Problems -- Set 1 can be obtained from Prof. Richard W. Adler, Naval Postgraduate School, Code EC/AB, Monterey, CA 93943, U.S.A. at a cost of $12.00 ($9.00 within the U.S.A).

For additional information, contact:

Prof. Giorgio Molinari Dipartimento di Ingegneria Elettrica Universita' degli Studi de Genova Via all 'Opera Pia, 11a I-16145 Genova GE, ITALY	Dr. Harold A. Sabbagh Sabbagh Associates, Inc. 4639 Morningside Drive Bloomington, IN 47401 U.S.A.
39-10-353-2733 39-10-353-2700 FAX	(812) 339-8273 (812) 333-1269 FAX

CALL FOR PAPERS

THE APPLIED COMPUTATIONAL ELECTROMAGNETICS SOCIETY ANNOUNCES A SPECIAL ISSUE OF THE ACES JOURNAL ON:

BIOELECTROMAGNETIC COMPUTATIONS

There are a number of areas where bioelectromagnetics, the interaction of biological tissue with electromagnetic energy, is being studied. Bioelectromagnetics can produce very beneficial effects to improve, for example, medical and industrial capabilities. On the other hand, there are unwanted side effects which may be a health hazard. There is a need for computational efforts to help quantify these important issue and improve our ability to harness electromagnetic energy to best effect.

Suggested topics for papers include:

Whole body and partial body dosimetry
Bioelectromagnetic/thermal interactions
Analytic methods including functional analysis
Differential methods and coupling techniques
Surface and volumetric integral equation techniques
Quasi-static, resonance and high frequency techniques
Graphics and computer I/O
Computer code validation

Papers may address applications including:

- Biomedical applications
  - RF hyperthermia
  - Physiological interactions and modeling
- RF biohazards
  - industrial/scientific/medical
  - communications systems eg. broadcast, microwave, radar
  - defence eg. radar, shipboard antennas
- Magnetic and electric near fields, body currents
- High voltage power line effects and modeling
- Lightning effects
- Standards

DEADLINE FOR PAPERS IS NOVEMBER 30, 1991

Send papers and inquiries to:

A.H.J. FLEMING AND K.H. JOYNER
Special Guest Editors
Telecom Australia Research Laboratories
770 Blackburn Road, P.O. Box 249
Clayton, Victoria, 3168 AUSTRALIA
Telephone +61 3 541 6155
Fax +61 3 543 4859
Telex AA 33999 RLABA

HIGHLIGHTS

OF THE

7TH REVIEW OF PROGRESS IN APPLIED COMPUTATIONAL ELECTROMAGNETICS

18-22 MARCH 1991

- **Featured Canonical Problem Review**. We will feature a Canonical Problem from "The ACES Collection of Canonical Problems Set 1" (which will be available at conference) and will present a previously unpublished Canonical Problem for solution by the membership, for presentation at the 8th Annual Review in 1992.

- **A CAEME (Computer Applications in Electromagnetics Education) special session** will be supported by the following companies and institutions:

  MIT
  Rose-Hulman Institute of Technology
  Hewlett-Packard Co.
  CAE Soft Corp.
  Compact Software
  Stanford University
  Advanced Electromagnetics
  U of California, Davis

- **Vendor booths** will be set up in the King Hall upper and lower lobbies and will be manned 2 - 4 PM each day, Tuesday through Thursday, 19-21 March.

- **Committee and User Group Meetings** will be held at 5:30 PM Tuesday, 19 March.

- **Six short courses** are offered this year on Monday, 18 March.

  Full-day offerings are
  1. The ESSENCE of Electromagnetic Radiation
  2. The Electromagnetic Analysis of Microstrip

  Half-day courses are
  1. UTD and its Practical Applications
  2. An Overview of Several Topics in Electromagnetic Modeling
  3. Introduction to GEMACS
  4. Volume Integral Equations and Conjugate Gradient Methods in Electromagnetic Nondestructive Evaluation

  (Full details are contained elsewhere in this Newsletter)

- **MIT tutorials on EM Fields and Energy** will be presented by CAEME. A 120 minute video tape will be on display on a continuous basis and will be made available to all attendees free of charge. Additional copies will be available for $10.

PRELIMINARY AGENDA

The Seventh Annual Review of Progress in Applied Computational Electromagnetics

NAVAL POSTGRADUATE SCHOOL
19 - 22 MARCH 1991

Frank Walker
Chairman, Technical Program Committee

MONDAY MARCH 18

0830-1200 & 1300-1630 **SHORT COURSES**

1800-2030 **CONFERENCE REGISTRATION** 101A Spanagel

2000 **ADCOM/COMMITTEE MEETING** (Members invited to observe) 122 Ingersoll

TUESDAY, MARCH 19

0715 **CONFERENCE REGISTRATION** 101A Spanagel

0730 **ACES BUSINESS MEETING** Stan Kubina ACES President King Hall

SESSION 1: USER INTERFACES AND PC APPLICATIONS FOR EM MODELING CODES
Moderator: Ronald Marhefka

0800 "A Portable Interactive-Graphics Pre-Processor for Use With Wire-Grid Modeling Software"
P.S. Excell and A.F. Armanious — University of Bradford, U.K.

0820 "Progress: Development of the Interactive Graphics Program for the EM Codes at Arizona State University"
J. Ping, J. Choi, and C.A. Balanis — Arizona State University
G.C. Barber — NASA Langley Research Center

0840 "An Update on GEMCOP, the Expert System for GEMACS and GAUGE"
R. Fisher — Science & Engineering Associates
E.L. Coffey III — Advanced Electromagnetics
T. Timmerman — Phillips Laboratory

0900 "Implementation of the NEC - Basic Scattering Code on a PC"
R.J. Marhefka — Ohio State University

0920 "NEC, FERM & GEMACS on the Macintosh"
R.W. Taylor and P. Bussey — McDonnell Douglas Helicopter Company

0940 **BREAK**

SESSION 2: CAEME SPECIAL SESSION ON COMPUTER APPLICATIONS IN ELECTROMAGNETIC EDUCATION
Moderator - Magdy Iskander

0950 "NSF/IEEE CAEME Center Activities, Progress Report, Software Products, and Future Focus"
M. Iskander, CAEME Director — University of Utah

1010 "Simulation of Electromagnetics Phenomena Using Finite Difference - Time Domain Techniques"
K. Li, M.A. Tassoudji, R.T. Shin, and J.A. Kong — Center for Electromagnetic Theory & Applications, MIT

1030 "Electromagnetic Code for Solving Static and Dynamic 2-D Field Problems on a Personal Computer"
J.E. Lebaric, M. Melton, and J. Engel — Rose-Hulman Institute of Technology

1050 "The High Frequency Electromagnetic Simulation of Arbitrary Two and Three Dimensional Structures"
B. Brim — Hewlett Packard Company

1110 "Software for Antenna Modeling and Radar Applications"
R.J. Hancock — CAE Soft Corporation

1130 "Microwave Explorer: An Electromagnetics Program for the Analysis of High Frequency Integrated Microstrip Circuits"
A. Hill, J. Burke, and K. Kottapalli — Compact Software

TUESDAY MARCH 19

1150 "A Case for Realism in Scientific Animation"
Z. Fazarine — Stanford University

1210 "Educational Uses of GEMAC"
E. L. Coffey III — Advanced Electromagnetics

1230 **LUNCH**

1320 "Experimental Demonstrations for Teaching Electromagnetic Fields and Energy"
M. Zahn, J. Melcher, and H.A. Haus — MIT

1340 "Lienard-Wiechert Field Generator and Hypercard Tutorials for Visual Electromagnetics"
R. Cole and D. Krull — University of California, Davis

SESSION 3: INVERSE PROBLEM SOLUTIONS — **Moderator: Margaret Cheney**

1400 "An Inverse Boundary Value Problem for Maxwell's Equations"
E. Somersalo — University of Helsinki
D. Isaacson and M. Cheney — Rensselaer Polytechnic Institute

1420 "A Layer-Stripping Approach to Impedance Imaging"
M. Cheney and D. Isaacson — Rensselaer Polytechnic Institute
E. Somersalo — University of Helsinki
E. Isaacson — University of Wyoming

1440 "Electric Current Computed Tomography"
D. Isaacson, M. Cheney, J.C. Newell, D.G. Glisser and J.C.Goble — Rensselaer Polytechnic Institute

1500 "Electrical Impedance Imaging of Two-Phase Flows"
J.T. Lin, H. Suzuki, L. Ovacik, O.C. Jones
J.C. Newell and M. Cheney — Rensselaer Polytechnic Institute

1520 **BREAK**

SESSION 4: ASYMPTOTIC SOLUTIONS — **Moderator; Andrew Terzuoli**

1530 "Primitive Validation for the Signature Prediction Tools Software Package"
D.J. Young and A.J. Terzuoli Jr. — Air Force Institute of Technology

1550 "High Frequency Scattering Code in a Distributed Processing Environment"
S. Suhr, A.J. Terzuoli Jr., and G.B. Lamont — Air Force Institute of Technology

1610 "Simulation of Site Obstruction Effects on the Performance of a High Gain Antenna Using NEC-BSC2"
A.M. Bucceri, J.C. Herper, and E. Mertz — UNISYS Defence Electronics

1630 "Bistatic Physical Optics Scattering from a Surface Described by an Electromagnetic or Acoustic Impedance Boundary Condition"
R. T. Brown — Lockheed Advanced Development Company

1730 **COMMITTEE AND USER GROUP MEETINGS**

1900 **INTERNATIONAL PUBLICATIONS DINNER**

WEDNESDAY MARCH 20

INTERNATIONAL FORUM — King Hall

0800 Reports from International Regional Representatives concerning topics of technical importance in each region.

Great Britain: Dr. David Lizius, AEA Industrial Technology, Culham, U.K.

Western Europe: Dr. Ruediger Anders, ACES Europe Committee Chairman, Applied Electromagnetic Engineering, Germany

Eastern Europe: Dr. Mihaela Morega, Polytechnic Institute of Bucharest

WEDNESDAY MARCH 20

Australia:	Dr. Gregory Haack, Surveillance Research Laboratory, South Australia
Japan:	Dr. Chiyo Hamamura, Mitsubishi Electronic Corporation, Japan
China:	Dr. Yuanren Qiu, Xi'an Jiaotong University, P.R. China
South America:	Dr. J.P.A. Bastos, Universidate Federal de Santa Catarina, Brazil
Africa:	Dr. Duncan Baker, University of Pretoria, South Africa

SESSION 5: NEW TECHNIQUES **Moderator: Ronald Pogorzelski**

0900 "A Hybrid Finite Element and Moment Method for Electromagnetic Scattering from Inhomogeneous Objects"
W.E. Boyce and A. Seidl — Lockheed Palo Alto Research Labs

0920 "A New Expansion Function of GMT: The Ringpole"
J. Zheng — Swiss Federal Institute of Technology, Switzerland

0940 "An Application of Symbolic Manipulation Software in Computational Electromagnetics"
R. Pogorzelski — General Research Corporation

1000 **BREAK**

1010 "Efficient Solution of Matrix Equations in Finite Element Modeling of Eddy Current NDE"
A. Mahmood, D.J. Lynch, Q.H. Nguyen, and L.D. Philipp — Washington State University at Tri-Cities

1030 "An Approximate (Symmetric) Combined Field Integral Equation for the Analysis of Scattering by Conducting Bodies in the Resonance Region"
L.M. Correia and A.M. Barbosa — CAPS-IST Universidade Techica De Lisboa, Portugal

1050 "New Expansion Functions for Long Structures in the MMP-Code"
P. Leuchtmann — Swiss Federal Institute of Technology, Switzerland

1110 "Direct Solution of the Wave Equation Using Parallel Computational Techniques"
R. Hohlfeld — Boston University

1130 "Using Numerical Modeling for Parametrically Characterizing the Statistical Properties of EM Fields"
T.H. Lehman — Consultant
E.K. Miller — Los Alamos National laboratory

SESSION 6: FINITE ELEMENT AND FINITE DIFFERENCE FREQUENCY DOMAIN SOLUTIONS
Moderator: Glenn Crabtree

1150 "Solution of Multi-Media Propagation and Scattering Problems Using Finite Elements"
T. Moyer Jr. — NKF Engineering
E. Schroeder — David Taylor Research Center

1210 "Finite Element Solutions to the Mass-Tensor Form of the Ginzburg-Landau Equations"
K.G. Herd — G.E. Corporate Research & Development
G. Theodossiou — Rensselaer Polytechnic Institute

1230 **LUNCH**

1320 "Characterization of Anechoic Chambers by Finite Difference Method"
S. Haffa and W. Wiesbeck — Standard Elektrik Lorenz AG, Germany
D. Hollmann — Universitat Karlsruhe, Germany

SESSION 7: MOMENT METHOD THEORY **Moderator: Allen Glisson**

1340 "A Multilevel Enhancement of the Method of Moments"
K. Kalbasi and K. Demarest — The University of Kansas

1400 "On the Applicability of Pulse Expansion and Point Matching in the Moment Method Solution of Three Dimensional Electromagnetic Boundary-Value Problems"
B.C. Ahn, K. Mahadevan, and A. Glisson — University of Mississippi

WEDNESDAY MARCH 20

1420 "Recursive Algorithms to Reduce the Computational Complexity of Scattering Problems"
W. C. Chew, Y.M. Wang, L. Gurel, and J.H. Lin — University of Illinois at Urbana-Champaign

1440 "Numerical Solution of the EFIE Using Arbitrarily-Shaped Quadrangular and Triangular Patches"
T. Maker and H. Singer — Technische Universitat Hamburg, Germany

1500 **BREAK**

SESSION 8: MODELING EM INTERACTIONS IN MATERIALS **Moderator: Kenneth Demarest**

1510 "General Approach for Treating Boundary Conditions on Multi-Regional Scatterers Using the Method of Moments"
J.M. Putnam — McDonnell Douglas Research Laboratories

1530 "Comparison of Computed and Measured Results for a Simple Man with Radio Model"
A. Glisson and D. Kajfez — University of Mississippi
W.P. Wheless, Jr. — University of Alabama
K.H. Agar — CM Engineering

1550 "Toolbox for Characterization of Materials"
J. Dornfest — Lockheed Missile & Space Company

1610 "Polarimetric Scattering and Control of Radar Cross Section of Chiral Targets of Simple Geometrics and Associated Code Development"
A.K.Bhattacharyya — New Mexico State University

1800 **HAPPY HOUR (NO HOST)** LA NOVIA TERRACE — HERMANN HALL

1900 **ACES AWARDS BANQUET** LA NOVI A ROOM — HERMANN HALL

THURSDAY MARCH 21

0730 Featured Canonical Problem Review — 101A Spanagel

SESSION 9: HIGH FREQUENCY APPLICATIONS AND WIRE GRID MODELING TECHNIQUES
Moderator: Christopher Trueman

0800 "Scattering By Sectored Cylinders"
B. Rulf — Grumman Corporation

0820 "RCS of Fundamental Scatters in the HF Band
C.W.Trueman and S.J. Kubina — Concordia University

0840 "Automated Radius Calculation for Wire-Grid Models"
C.W.Trueman — Concordia University

SESSION 10: MICROWAVE CIRCUITS AND MICROSTRIP ANTENNA ANALYSIS
Moderator: Fabrice Huret

0900 "Full-Wave Modeling of a Multi-Layer Microstrip Array with a Superconducting Microstrip Feed Network"
J.S. Herd — Rome Air Development Center

0920 "Modeling of an Anisotropic Stripline"
M. Kamerei, N. Daoud, R. Salazar, and M. Bouthinon — Institut National Polytechnique De Grenoble, France

0940 "Analysis of the Behavior of Quasi Complex Modes on Lossy Substrate Boxed Microstrip Lines"
F. Huret, P. Pribetich, and P. Kennis — Centre Hyperfrequences et Semiconducteurs, France

1000 **BREAK**

1010 "Computer Modeling of Helical Slow-Wave Structures for Use in Travelling Wave Tubes"
A.J. Marrison — AEA Industrial Technology, Culham Labs, U.K.

1030 "Electrically Trimmed Array Synthesis for Solid State Radar Applications"
M.A. Hussain — General Electric R & D Center

1050 "Guided Wave Propagation on Two-Dimensional Clusters of Directly-Coupled Cavity Resonators"
R. Speciale — General Dynamics, Air Defense Systems

THURSDAY MARCH 21

SESSION 11: ANTENNA ANALYSIS **Moderator: Asoke Bhattacharyya**

1110 "Method of Moments Analysis of Cavity-Backed Wire Antennas"
D.C.Jenn — Naval Postgraduate School
E.E. Barber — Hughes Aircraft

1130 "Moment-Method Modeling of the Norman-Mode Helical Antenna"
P. Excell — University of Bradford, U.K.

1150 "Intercomparison of Several Moment-Method Models of Dipoles and Folded Dipoles"
P. Excell — University of Bradford, U.K.

1210 "Simplified Horn Antenna Parameter Estimation Using Selective Criteria"
P.D. Ewing — Oak Ridge National Laboratory

1230 **LUNCH**

1320 "Far-Field Patterns of Ultra High Gain Antenna Arrays of Finite Size"
R.A. Speciale — General Dynamics, Air Defense Systems

SESSION 12: NEC ANTENNA ANALYSIS **Moderator: Peter Excell**

1340 "Modeling a Shipboard Fan Antenna"
L. Koyama — Naval Ocean Systems Center

1400 "Optimizing Sidelobe Levels of an Array Using NEC"
R.L. Haupt and C.J. McCormack — U.S. Air Force Academy
W.F. Brandow III — Williams Air Force Base

1420 "Using the Numerical Electromagnetics Code (NEC) to Calculate Magnetic Field Strength Close to a Sommerfeld Ground"
G. Haack — Surveillance Research Laboratory, South Australia

1440 "Refinement of HF Vertical Half Rhombic Characterization"
W.P. Wheless Jr — University of Alabama
M.D. Fanning — UDS Motorola
D.L. Faust and M.B. King — Eyring, Inc.

1500 **BREAK**

SESSION 13: ELECTROMAGNETIC COMPATIBILITY (EMC) **Moderator: David P. Millard**

1510 "A Survey of Numerical Techniques for Modeling Sources of Electromagnetic Interference"
T.H Hubing — University of Missouri-Rolla

1530 "Computer Aided Electromagnetic Compatibility Analysis"
D.P. Millard, J.K. Daher, R.M. Herkert, and J.A. Woody — Georgia Institute of Technology

SESSION 14: LOW FREQUENCY APPLICATIONS **Moderator: Perry Wheless Jr.**

1550 "Transient Leakage Field in Transformers With Saturable Magnetic Core"
M.I. Morega and A.M.I. Morega — Polytechnic Institute of Bucharest

1610 "Finite Element Analysis of Magnetic Field Distribution in Ferromagnetic Shields"
C.V. Bala, O.C. Craiu, and M.I. Morega — Polytechnic Institute of Bucharest

1630 "A Model for Dynamic Analysis of AC Contractor"
J.P.A. Bastos — Universidate Federal de Santa Catarina, Brazil

1650 "Eddy Current Analyses of the Core Plate in a Large Power Transformer"
Y. Qiu, W. Wang, Q. Zhang, G. Xiao, and X. Li — Xi'an Jiaotong University, P.R. China

1710 "Engineering Resolvability of Engineering Eddy Current Problems"
Z.Cheng, S. Gao, D. Zhang, J. Wang, and C. Ye — BaoDing Transformer Works, P.R. China

FRIDAY MARCH 22

SESSION 15: TIME DOMAIN METHODS **Moderator: Gerald Burke**

0730 "Comparison of GTD and MOM Scattering Computations and Transformation to the Time Domain"
P. Elliot — ARCO Power Technologies
I. Kohlberg — Kohlberg Associates

0750 "Evaluation of Modified Log-Periodic Antennas for Transmission of Wide-Band Pulses"
G.J. Burke — Lawrence Livermore National Laboratory

0810 "The Pulsed Response from a Parabolic Reflector Antenna"
G.R. Salo — BDM International

0830 "A Ray-Tracing Model to Predict Time-Domain RCS Performance of a Compact Range"
N. Carey and A. Jain — Hughes Aircraft Company
S. Brumley — Denmar Incorporated

0850 **BREAK**

SESSION 16: TRANSMISSION LINE MATRIX (TLM) TIME DOMAIN APPLICATIONS
Moderator: Lloyd Riggs

0900 "A Transmission Line Matrix (TLM) Method Analysis of the Separated Aperture Buried Dielectric Anomaly Detection Scheme"
P.R. Hayes and L.S. Riggs — Auburn University
C.A. Amaseen — U.S. Army Belvoir RD&E Center

0920 "The Modeling of Lossy Materials with the Symmetrical Condensed Node TLM Method"
F.J. Germain, G.K. Gothard, and L.S. Riggs — Auburn University

0940 "The Analysis of Passive Microwave Components Using the TLM Method"
P.R. Conway, F.J. German, and L.S. Riggs — Auburn University

SESSION 17: FINITE ELEMENT AND FINITE DIFFERENCE TIME DOMAIN SOLUTIONS
Moderator: Raymond Luebbers

1000 "A New Weighted Residual Finite Element Method for Computational Electromagnetics in the Time Domain"
J. Ambrosiano and S.T. Brandon — Lawrence Livermore National Laboratory
R. Lohner — George Washington University

1020 "Virtual Particle' Electromagnetic Particle-Mesh Algorithms for Microwave Tube Modeling"
J.W. Eastwood — AEA Industrial Technology, Culham Labs. U.K.

1040 "New Magnetic Field Analysis for Dynamical Problem Involving Relative Displacement With Time"
C. Hamamura, M. Okabe, T. Ohmura, and K. Sato — Mitsubishi Electronic Corporation, Japan

1100 **BREAK**

1110 "A Hybrid Approach to Calculating Radar Cross Sections"
G.R. Salo — BDM International

1130 "A 2-D Finite-Volume Time-Domain Technique for RCS Evaluation"
R. Holland
V.P. Cable, and L. Wilson — Lockheed Advanced Development Company

1150 "RCS Calculation for Smooth Bodies of Revolution Using FDTD"
R. Luebbers — Pennsylvania State University

1210 "FDTD Waveguide Coupling Modeling and Experimental Validation"
R. Luebbers — Pennsylvania State University

SHORT COURSES AT THE 7TH ANNUAL REVIEW OF PROGRESS IN APPLIED COMPUTATIONAL ELECTROMAGNETICS

Short courses: Monday, March 18, 1991
Symposium: Tuesday-Friday, March 19-22, 1991

The Applied Computational Electromagnetics Society is pleased to announce six short courses to be offered in conjunction with its annual meeting. All short courses will be held on Monday, March 18, 1991. Registration begins at 7:30 am.

COURSE INFORMATION

FULL-DAY COURSES (begin at 8:30 am, approximately 6 hours):

The ESSENCE of Electromagnetic Radiation

This course covers five topics: *Antenna theorems* (description of antenna enhancement according to powerful theorems published), *lowerbound bistatic radar cross section computation* (derivation of lowerbound formula in the frequency domain for an arbitrary body), *radiation from a spatially oscillating electron* (demonstration of consistency of the self-interaction calculation with the far-field calculation), *aperture excitation of a Ziolkowski electromagnetic "bullet"* (derivation of causal aperture excitation of the component which is propagating in the direction of interest), and *maximization of directed electromagnetic radiation with an optimized antenna* (derivation of upperbounds to the maximum energy density per steradian radiated during a specified time interval and the maximum instantaneous electric far-field, given a specified working volume). These timely topics are based on the lecturer's published papers and private notes which have evolved over the years. The work has been verified analytically and/or computationally.

by Dr. Robert M. Bevensee, Lawrence Livermore National Laboratory

The Electromagnetic Analysis of Microstrip

This course presents the electromagnetic microwave design program, *em*, along with its companion, mouse-based graphical user interface, *xgeom*. The *em* analysis calculates S-parameters for arbitrary multi-layered microwave circuit structures with validity at all microwave frequencies. *Em* is a complete electromagnetic analysis, including all electromagnetic effects and is closely related to the spectral domain technique. The analysis includes vertical current (between layers and to ground), making it a full 3-D analysis. The analysis is optimized for predominantly planar circuits, realizing substantial speed improvements over finite element techniques for such circuits. *Em* is used in the validation of MIC and MMIC microwave circuits prior to fabrication and is used at most major MMIC facilities.

by Dr. James C. Rautio, Sonnet Software, Inc.

MORNING HALF-DAY COURSES (begin at 8:30 am):

UTD and its Practical Applications

The Uniform Geometrical Theory of Diffraction (UTD) is a high-frequency ray-based method that is well suited for the analysis of electromagnetic scattering from complex structures. A brief discussion of UTD is provided in the context of its use in practical applications such as antenna siting, antenna-to-antenna coupling, and radiation hazard studies. The NEC-Basic Scattering Code (NEC-BSC) is used as the primary example. An introduction of its capabilities is presented. Various examples to illustrate the art of translating engineering situations into useable models and then validating the results is discussed.

by Dr. Ronald J. Marhefka, The Ohio State University Electroscience Laboratory

An Overview of Several Topics in Electromagnetic Modeling

This course covers three topics. Numerical techniques for modeling antennas near ground and with ground screens are reviewed. After a general introduction to time-domain modeling, TWTD, a thin-wire time domain code using a method of moments solution similar to NEC, is described. The computational benefits of TWTD are emphasized. For the final topic large gains in computational efficiency are demonstrated using Model-Based Parameter Estimation (MBPE) which employs information not contained in the basic model, such as method of moments. The information provided in this course should be of value in choosing an appropriate modeling code, making optimal use of the code, and efficiency processing the results.

by Dr. E. K. Miller, Los Alamos National Laboratory and G. Burke, Lawrence Livermore National Laboratory

AFTERNOON HALF-DAY COURSES (begin at 1:00 pm):

Introduction to GEMACS

The GEMACS computer program has evolved into a rich collection of computational techniques, including method of moments (MoM), geometric theory of diffraction (GTD), and finite difference (FD). In GEMACS these techniques can be combined into hybrids that permit the solution of quite complex problems. The purpose of this course is to familiarize the new user with the potential of GEMACS for solving practical electromagnetic problems of wide range, including antenna analysis, scattering, and coupling through apertures. Handouts will show how to translate user inputs into GEMACS commands and geometries apropos to a particular problem and how to transform GEMACS field and current outputs into engineering quantities of interest.

by Buddy Coffey, Advanced Electromagnetics

Volume Integral Equations and Conjugate Gradient Methods in Electromagnetic Nondestructive Evaluation

Computational models based on integral equations, together with the conjugate-gradient method and FFT's, are presented for applying electromagnetic methods (specifically eddy-currents) to quantitative nondestructive evaluation (NDE). Some areas of application include regular (isotropic) metals and advanced composite (anisotropic) materials. Simulated and actual data are used for examples.

by Dr. Harold A. Sabbagh, Sabbagh Associates, Inc.

REGISTRATION INFORMATION

To register for any of the courses, fill out the form below and include a check to THE APPLIED COMPUTATIONAL ELECTROMAGNETICS SOCIETY for the indicated amount.

Further information: J. W. Rockway (619) 553-5688, R. W. Adler (408) 646-2352

Mail to: R. W. Adler, Naval Postgraduate School, Code EC/AB, Monterey Ca. 93943.

Name: _____

Address: _____

_____

_____

_____

Telephone: _____

Enclosed is a check for _____.

Please enroll me in the following classes:

_ **The ESSENCE of Electromagnetic Radiation**, full-day
Fee: $120 before 3/9/91, $130 after 3/9/91, $140 on 3/18/91

_ **The Electromagnetic Analysis of Microstrip**, full-day
Fee: $120 before 3/9/91, $130 after 3/9/91, $140 on 3/18/91

_ **UTD and its Practical Applications**, morning
Fee: $70 before 3/9/91, $80 after 3/9/91, $90 on 3/18/91

_ **An Overview of Several Topics in Electromagnetic Modeling**, morning
Fee: $70 before 3/9/91, $80 after 3/9/91, $90 on 3/18/91

_ **Introduction to GEMACS**, afternoon
Fee: $70 before 3/9/91, $80 after 3/9/91, $90 on 3/18/91

_ **Volume Integral Equations and Conjugate Gradient Methods in Electromagnetic Nondestructive Evaluation**, afternoon
Fee: $70 before 3/9/91, $80 after 3/9/91, $90 on 3/18/91

ACES reserves the right to cancel a course at any time with full refund.

MOTELS / HOTELS LIST FOR 1991 ACES CONFERENCE

** (WITHIN WALKING DISTANCE OF NPS)

DAYS INN
1400 Del Monte Blvd, Seaside, CA
(408) 394-5335 Govt. Rate $45.00
POC. Ms. Karen Hanlon
Civilian rate: $55.00
Block of rooms reserved for ACES.
Make reservations by 4 March 1991.

HOLIDAY INN (**)
(FORMERLY MONTEREY HOTEL RESORT)
1000 Aguajito Rd. Monterey, CA
(408) 373-6141 Govt. Rate $60.00
POC: Sales Director
Civilian rate: $60.00
Block of rooms reserved for ACES.
Make reservations by 8 March 1991.

FIRESIDE LODGE (**)
1131 10th St. Monterey, CA
(408)373-4172 Govt. Rate $40.00
POC: Ms. Dianne Northcutt.
Civilian rate: $48.00
Block of rooms reserved for ACES.
Make reservations by 11 March 1991

HYATT HOTEL & RESORTS (**)
1 Old Golf Course Rd. Monterey CA
(408)372-1234 Govt. Rate: $71.00
Civilian Rate: $115.00
Block of rooms reserved for ACES.
Make reservtions by 4 March 1991.

MOTELS LISTED BELOW ARE TAKEN FROM THE CALIFORNIA TRIPLE A DIRECTORY.
NO ROOMS HAVE BEEN SET ASIDE FOR ACES CONFERENCE.
GOVERNMENT RATES ARE LISTED; REGULAR RATES ARE PRICES TAKEN FROM THE TRIPLE A DIRECTORY.
POC'S REFER TO TRAVELERS ON GOVERNMENT ORDERS

DOUBLETREE
2 Portola Plaza, Monterey, CA
(408) 649-4511 Govt. Rate $71.00
POC: Mr. Ben Beasley
(Regular rate: $115-175)

RAMADA INN
1425 Munras Ave. Monterey, CA
(408) 649-1020 Govt. Rate $44.00
POC: Ms. Liz Dunbar
(Regular rate: $62-92)

TRAVELODGE (MONTEREY FAIRGROUNDS)
2030 Fremont St. Monterey, CA
(408) 373-3381 Govt. Rate $32.00
POC: Ms. Mary O'Neal
(Regular rate: $44)

CYPRESS TREE INN
2227 Fremont St. Monterey, CA
(408) 372-7586 Govt. Rate $33.00
POC: Mr. Steve Meyer
(Regular rate: $52-62)

MONTEREY PLAZA
400 Cannery Row Monterey, CA
(408) 646-1700 Govt. Rate $71.00
POC: Ms. Bev Owens
(Regular rate: $95-250)

STAGECOACH MOTEL (**)
1111 10th St. Monterey, CA
(408) 373-3632 Govt. Rate $31.00
POC: Mr. Steve Kim
(Regular rate: $48-90)

CASA MUNRAS GARDEN HOTEL
Fremont & Munras Avel Monterey, CA
(408) 375-2411 Govt. Rate $50.00
POC: Cindy Wedlake
(Regular rate: $69-119)

MONTEREY SHERATON
350 Calle Principal, Monterey, CA
(408) 649-4234 Govt. Rate: $71.00
POC: Govt. Sales Rep.

ARBOR INN
1058 Munras St, Monterey, CA
(408) 372-3281 Govt. Rate $40.00
POC: Mr. Dale Duffey
(Regular rate: $59-84)

FRANCISCAN INN
2058 Fremont St. Monterey, CA
(408) 375-9511 Govt. Rate: $38.00
POC: Mr. Pat Nash
(Regular rate: $46-56)

VICTORIAN INN
487 Foam St. Monterey, CA
(408) 373-8000 Govt. Rate $71.00
POC: Ms. Sue Racanelli
(Regular rate: $79-99)

THE MONTEREY HOTEL
406 Alvarado St. Monterey, CA
(408) 375-3184 Govt. Rate $71.00
POC: Ms. Candy Myers

When you call to make motel reservations, mention that you are attending a conference at the Naval Postgraduate School. If you are traveling on Government Orders, indicate so. Before arrival at NPS Govt. travelers must contact the NPS BOQ office to receive a non-availability certification number. Without this number preassigned, the BOQ will NOT stamp travel orders with non-availability confirmation. NPS BOQ OFFICE AV 878-2060/9 or (408) 646-2060/9.

AIRLINES (MONTEREY AIRPORT) SFO, LAX AND SJC CONNECTIONS.
UNITED, US AIR, DELTA SKYWEST, AMERICAN EAGLE